ENGINE

01
SECTION

OUTLINE 01-00
ON-BOARD DIAGNOSTIC
[ENGINE CONTROL SYSTEM
(L8, LF)]. 01-02A
ON-BOARD DIAGNOSTIC
[MZR-CD (RF Turbo)] 01-02B
MECHANICAL [L8, LF]. 01-10A
MECHANICAL
[MZR-CD (RF Turbo)] 01-10B
LUBRICATION [L8, LF] 01-11A
LUBRICATION
[MZR-CD (RF Turbo)] 01-11B
COOLING SYSTEM [L8, LF] . . 01-12A
COOLING SYSTEM
[MZR-CD (RF Turbo)] 01-12B
INTAKE-AIR SYSTEM
[L8, LF] 01-13A
INTAKE-AIR SYSTEM
[MZR-CD (RF Turbo)] 01-13B
FUEL SYSTEM [L8, LF] 01-14A
FUEL SYSTEM
[MZR-CD (RF Turbo)]. 01-14B
EXHAUST SYSTEM [L8, LF]. . . 01-15A
EXHAUST SYSTEM
[MZR-CD (RF Turbo)]. 01-15B
EMISSION SYSTEM [L8, LF] . . 01-16A
EMISSION SYSTEM
[MZR-CD (RF Turbo)]. 01-16B
CHARGING SYSTEM
[[L8, LF] 01-17A
CHARGING SYSTEM
[MZR-CD (RF Turbo)]. 01-17B
IGNITION SYSTEM. 01-18
STARTING SYSTEM [L8, LF] . . 01-19A
STARTING SYSTEM
[MZR-CD (RF Turbo)]. 01-19B
CONTROL SYSTEM [L8, LF] . . 01-40A
CONTROL SYSTEM
[MZR-CD (RF Turbo)]. 01-40B

01–00 OUTLINE

ENGINE ABBREVIATIONS. 01–00–1
ENGINE FEATURES [L8, LF] 01–00–2
ENGINE FEATURES
[MZR-CD (RF Turbo)]. 01–00–3
ENGINE SPECIFICATION [L8, LF] 01–00–4
ENGINE SPECIFICATION
[MZR-CD (RF Turbo)]. 01–00–7

ENGINE ABBREVIATIONS

DPE010002000T01

AAS	Air Adjusting Screw
ABDC	After Bottom Dead Center
ABS	Antilock Brake System
ACC	Accessories
ATDC	After Top Dead Center
ATX	Automatic Transaxle
BBDC	Before Bottom Dead Center
BDC	Bottom Dead Center
BTDC	Before Top Dead Center
CAN	Controller Area Network
CCM	Comprehensive Component Monitor
CM	Control Module
DC	Drive Cycle
DLC-2	Data Link Connector-2
DOHC	Double Overhead Camshaft
DPF	Diesel Particulate Filter
DSC	Dynamic Stability Control
EX	Exhaust

FFD	Freeze Frame Data
HLA	Hydraulic Lash Adjuster
HU	Hydraulic Unit
IG	Ignition
IN	Intake
KOEO	Key On Engine Off
KOER	Key On Engine Running
M	Motor
MRE	Magneto Resistance Element
MTX	Manual Transaxle
PATS	Passive Anti-theft System
PC	Pending Code
PCV	Positive Crankcase Ventilation
PID	Parameter Identification
PM	Particulate Matter
P/S	Power Steering
SEI	Single Electric Ignition
SST	Special Service Tool
TAS	Throttle Adjust Screw
TDC	Top Dead Center
VBC	Variable Boost Control
WDS	Worldwide Diagnostic System

ENGINE FEATURES [L8, LF]

DPE010002000T02

Mechanical

Reduced weight	• Aluminum alloy cylinder head and cylinder block adopted • Aluminum alloy engine mount bracket adopted • Plastic cylinder head cover adopted (LF)
Reduced engine noise and vibration	• Silent timing chain adopted • Crankshaft pulley with torsional damper adopted • Pendulum type engine mount adopted • Deep, skirt-type cylinder block adopted, composed of an integrated main bearing cap together with a ladder frame structure (LF)
Improved serviceability	• Drive belt auto tensioner adopted • Timing chain adopted • Engine front cover with service holes adopted • Stretch-type A/C drive belt adopted (LF)

Lubrication

Reduced noise	• Aluminum alloy oil pan adopted
Reduced weight	• Plastic oil strainer adopted
Improved lubricity	• Trochoid gear type oil pump adopted • Oil jet valves adopted • Water-cooled type oil cooler adopted

Cooling System

Reduced weight	• Cross flow type radiator with aluminum core and plastic tank adopted • Stainless steel thermostat with plastic thermostat cover adopted
Miniaturization	• Built-in type water pump adopted
Reduced engine noise and vibration	• Electric cooling fan adopted • Fan control module adopted
Reduced power consumption	• Fan control module adopted

Intake air System

Improved engine torque	• Variable intake air system adopted (LF)
Improved noise reduction	• Resonance chamber adopted
Improved emission performance	• Variable tumble system adopted

Fuel System

Improved serviceability	• Nylon tubes adopted for fuel hoses in the engine compartment and around the fuel tank, and quick release connectors adopted for joints
Reduction of evaporative gas	• Returnless fuel system adopted

Emission System

Improved exhaust gas purification	• Exhaust gas recirculation (EGR) system adopted • Catalytic converter system adopted

Charging System

Improved reliability	• Battery duct adopted
Miniaturization	• Non-regulator type generator with built-in power transistor adopted

Ignition System

Improved reliability	• Independent ignition control system with distributorless ignition coil adopted
Improved durability	• Spark plug with an iridium alloy center electrode and platinum tip ground electrode adopted

Starting System

Improved startability	• Reduction type starter adopted

Control System

Improved engine torque and output	• Variable intake air control adopted (LF)
Improved emission performance	• Variable tumble control adopted • EGR system adopted
Wiring harness simplification	• Controller area network (CAN) adopted

ENGINE FEATURES [MZR-CD (RF TURBO)]

DPE010002000T05

Mechanical

Improved power performance	• Coated pistons have been adopted
Reduced engine noise and vibration	• An aluminium alloy oil pan upper block has been adopted • An eight counter weight crankshaft has been adopted • A crankshaft pulley cover has been adopted • An engine cover with insulator has been adopted • A pendulum type engine mount has been adopted
Improved serviceability	• A serpentine type drive belt has been adopted • An auto tensioner that automatically adjusts the drive belt tension has been adopted
Improved design	• An engine cover has been adopted

Lubrication

Improved lubricity	• Trochoid gear type oil pump adopted • Oil jet valves adopted • Water-cooled type oil cooler adopted

Cooling System

Reduced weight	• Cross flow type radiator with aluminum core and plastic tank adopted
Reduced engine noise and vibration	• Electric cooling fan adopted • Fan control module adopted
Reduced power consumption	• Fan control module adopted

Intake air System

Power efficiency, performance, and fuel economy	• A variable geometry turbocharger has been adopted

Fuel System

Exhaust gas purification	• Common rail injection system adopted

Emission System

Improved exhaust gas purification	• Diesel particulate filter system adopted • EGR system adopted • EGR cooler adopted • Intake shutter valve adopted • Oxidation catalytic converter adopted
Improved reliability	• Rollover valve adopted • Evaporative chamber adopted

Charging System

Miniaturization	• Non-regulator type generator with built-in power transistor adopted

Starting System

Improved startability	• Reduction type starter adopted

Control System

Improved emission gas purification	• Intake shutter valve control adopted • Fuel injection control changed • Diesel particulate filter regeneration control adopted • EGR control adopted
Wiring harness simplification	• Controller area network (CAN) adopted
Improved drivability	• Cruise control adopted

ENGINE SPECIFICATION [L8, LF]

DPE010002000T04

Specification

Item			Specifications	
			L8	LF
MECHANICAL				
Cylinder arrangement and number			In-line, 4-cylinder	
Combustion chamber			Pentroof	
Valve system			DOHC, timing chain driven, 16 valves	
Displacement (ml {cc, cu in})			1,598 {1,598, 97.5}	1,999 {1,999, 122.0}
Bore × stroke (mm {in})			78.0 × 83.6 {3.07 × 3.29}	87.5 × 83.1 {3.44 × 3.27}
Compression ratio			10.0:1	10.8:1
Compression pressure (kPa {kgf/cm^2, psi} [rpm])			1,470 {14.99, 213.2} [250]	1,720 {17.54, 249.5} [300]
Valve timing	IN	Open BTDC (°)	4	4
		Close ABDC (°)	33	52
	EX	Open BBDC (°)	37	37
		Close ATDC (°)	4	4
Valve clearance (mm {in})		IN	0.22—0.28 {0.0087—0.011} [Engine cold]	
		EX	0.27—0.33 {0.0107—0.0129} [Engine cold]	
LUBRICATION SYSTEM				
Type			Force-fed type	
Oil pressure (reference value) [oil temperature: 100°C {212°F}] (kPa {kgf/cm^2, psi} [rpm])			234—521 {2.39—5.31, 33.9—75.5} [3,000]	
Oil pump	Type		Trochoid gear type	
	Relief valve opening pressure (reference value) (kPa {kgf/cm^2, psi}		450—550 {4.59—5.61, 65.3—79.8}	
Oil cooler	Type		Water-cooled	
Oil filter	Type		Full-flow, paper element	
	Bypass pressure (kPa {kgf/cm^2, psi})		80—120 {0.82—1.22, 11.6—17.4}	

Item			Specifications	
			L8	LF
Oil capacity (approx. quantity)	Total (dry engine)	(L {US qt, Imp qt})	4.6 {4.9, 4.0}	
	Oil replacement	(L {US qt, Imp qt})	3.9 {4.1, 3.4}	
	Oil and oil filter replacement	(L {US qt, Imp qt})	4.3 {4.5, 3.8}	
COOLING SYSTEM				
Type			Water-cooled, Electromotive	
Coolant capacity (approx. quantity)		(L {US qt, Imp qt})	With heater: 7.0 {7.4, 6.2} Without heater: 6.5 {6.9, 5.7}	
Water pump	Type		Centrifugal, V-ribbed belt-driven	
Thermostat	Type		Wax, bottom-bypass	
	Opening temperature	(°C {°F})	80—84 {176—183}	
	Full-open temperature	(°C {°F})	97 {207}	
	Full-open lift	(mm {in})	8.0 {0.31} or more	
Radiator	Type		Corrugated fin	
Cooling system cap	Cap valve opening pressure	(kPa {kgf/cm^2, psi})	93.2—122.6 {0.95—1.25, 13.5—17.8}	
Cooling fan	Type		Electric	
	Number of blades		7	
	Outer diameter	(mm {in})	360 {14.2}	
	Fan motor output	(W)	240	
FUEL SYSTEM				
Injector	Type		Hi-ohmic	
	Type of fuel delivery		Top-feed	
	Type of drive		Voltage	
Pressure regulator	Regulating pressure	(kPa {kgf/cm^2, psi})	approx. 390 {3.98, 56.6}	
Fuel tank	Capacity	(L {US gal, Imp gal})	60 {16, 13}	
Fuel pump	Type		Electric	
Fuel	Type		Premium unleaded fuel {Research octane number is 95 or more (conforming to EN228}[*1]}[*2], Regular unleaded fuel (Research octane number is 91)[*3], Regular unleaded fuel (Research octane number is 90 or more)[*4]	
EMISSION SYSTEM				
Catalyst	Type		WU-TWC (monolith)	WU-TWC (monolith), TWC (monolith)
Evaporative emission control system	Type		Charcoal canister type	
PCV system	Type		Closed type	
CHARGING SYSTEM				
Battery	Voltage	(V)	12	
	Type and capacity (5-hour rate)	(A·h)	50D20L (40), 75D23L (52)	
Generator	Output	(V-A)	12-90	
	Regulated voltage		Controlled by PCM	
	Self diagnosis function			
IGNITION SYSTEM				

Item			Specifications	
			L8	LF
Ignition system	Type		SEI (Single Electronic Ignition)	
	Spark advance		Electronic	
	Firing order		1—3—4—2 (all cylinders independent firing) 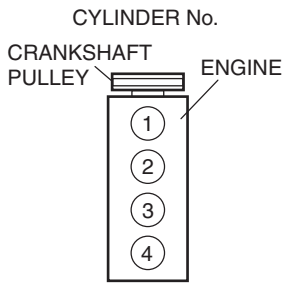 	
Spark plug	Type		L303 18 110	
STARTING SYSTEM				
Starter		Type	Coaxial reduction	
		Output (kW)	1.0	
CONTROL SYSTEM				
EGR control	Type		Stepping motor type	

*1 : Europe specs.
*2 : European countries, Israel, Cyprus, Singapore, Brunei, Trinidad and Tobago, China (Hong Kong, Macao), Honduras, Panama, Nicaragua, Lebanon, El Salvador, Morocco, Taiwan, Indonesia, Guadeloup, French Guiana, Reunion, Canary Islands, New Caledonia, Turkey, Martinique
*3 : Peru
*4 : Chile, Costa Rica, The Philippines, Guatemala, Venezuela

Recommended engine oil

Item	Specifications			
	Europe			Except Europe
Grade	API SL or ACEA A3/A5	API SL or ACEA A3		API SG/SH/SJ/SL or ILSAC GF–2/GF–3
Viscosity (SAE)	5W–30	10W–40	5W–20	40, 30, 20, 20W–20, 10W–30, 10W–40, 10W–50, 20W–40, 15W–40, 20W–50, 15W–50, 5W–20, 5W–30
Remarks	**Mazda genuine Dexelia oil e.g.**		—	—

Engine Performance Curve

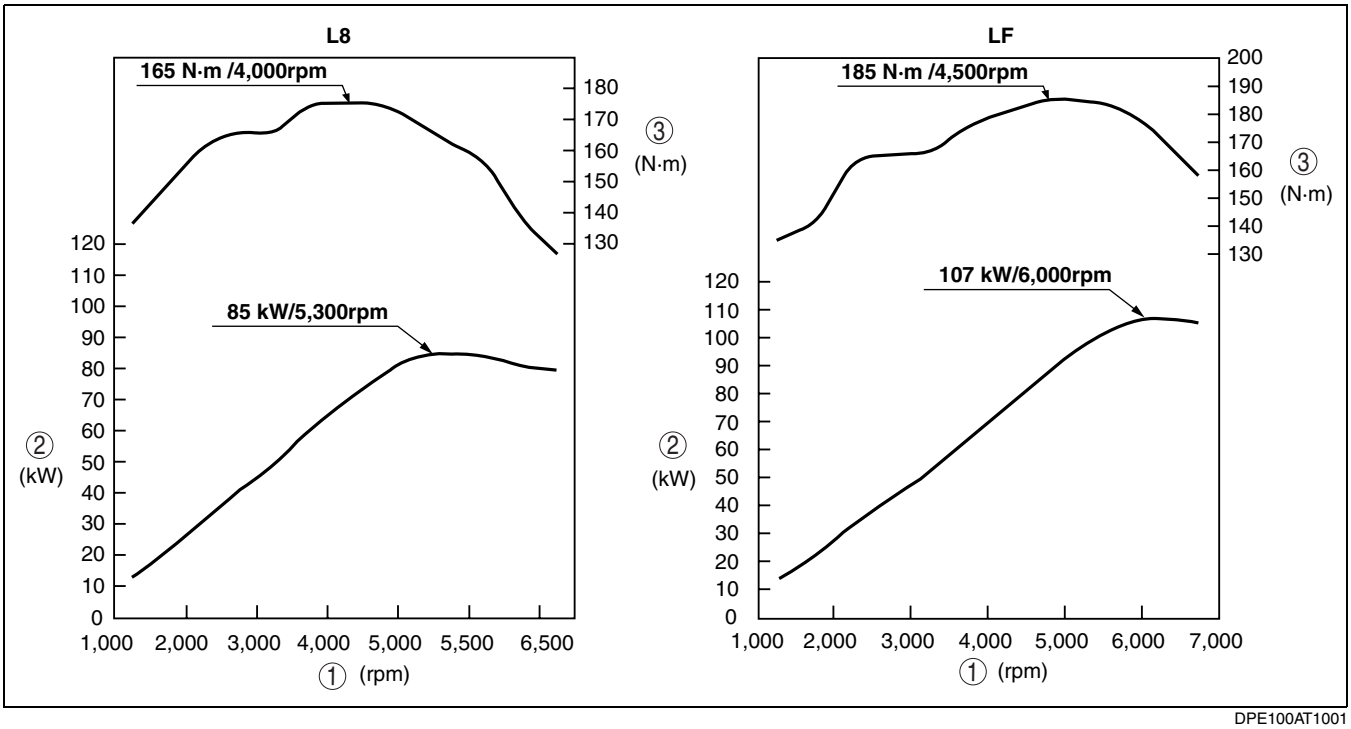

DPE100AT1001

1	Engine speed
2	Output

3	Torque

ENGINE SPECIFICATION [MZR-CD (RF TURBO)]

DPE010002000T06

Specification

Item				Specifications MZR-CD (RF Turbo)
MECHANICAL				
Type				Diesel, 4-cycle
Cylinder arrangement and number				In-line, 4 cylinder
Combustion chamber				Direct injection
Valve system				SOHC, belt-driven, 16-valve
Displacement			(ml {cc, cu in})	1,998 {1,988, 122.9}
Bore x stroke			(mm {in})	86.0 x 86.0 {3.39 x 3.39}
Compression ratio				16.7
Compression pressure			(kPa {kgf/cm^2, psi} [rpm])	2,900 {29.6, 420.7} [250]
Valve timing	IN	Open	BTDC (°)	6
		Close	ABDC (°)	30
	EX	Open	BBDC (°)	41
		Close	ATDC (°)	8
Valve clearance [engine cold]	IN		(mm {in})	0.12—0.18 {0.0048—0.0070}
	EX		(mm {in})	0.32—0.38 {0.0126—0.0149}
LUBRICATION SYSTEM				
Type				Force-fed type
Oil pressure (reference value) [oil temperature: 100°C {212°F}]			(kPa {kgf/cm^2, psi} [rpm])	147 {1.5, 21} min. [1,000] 343 {3.5, 50} min. [3,000]
Oil pump	Type			Trochoid gear type
	Relief valve opening pressure (reference value)		(kPa {kgf/cm^2, psi}	580—700 {5.9—7.1, 84.1—101.5} [3,000]
Oil cooler	Type			Water-cooled

Item			Specifications MZR-CD (RF Turbo)
Oil filter	Type		Full-flow, paper element
	Bypass pressure	(kPa {kgf/cm^2, psi})	78—118 {0.8—1.2, 11.3—17.1}
Oil capacity (approx. quantity)	Total (dry engine)	(L {US qt, Imp qt})	5.5 {5.8, 4.8}
	Oil replacement	(L {US qt, Imp qt})	4.9 {5.2, 4.3}
	Oil and oil filter replacement	(L {US qt, Imp qt})	5.1 {5.4, 4.5}
COOLING SYSTEM			
Type			Water-cooled, Electromotive
Coolant capacity (approx. quantity)		(L {US qt, Imp qt})	With heater: 8.5 {9.0, 7.5} Without heater: 8.0 {8.5, 7.0}
Water pump	Type		Centrifugal, Timing belt-driven
Thermostat	Type		Wax, bottom-bypass
	Opening temperature	(°C {°F})	80—84 {176—183}
	Full-open temperature	(°C {°F})	95 {203}
	Full-open lift	(mm {in})	8.5 {0.33} or more
Radiator	Type		Corrugated fin
Cooling system cap	Cap valve opening pressure	(kPa {kgf/cm^2, psi})	93.2—122.6 {0.95—1.25, 13.5—17.8}
Cooling fan	Type		Electric
	Number of blades		7
	Outer diameter	(mm {in})	360 {14.2}
	Fan motor output	(W)	240
INTAKE AIR SYSTEM			
Turbocharger type			Variable geometry turbocharger
Air cleaner element			Dry type
Glow plug type			Stainless type
FUEL SYSTEM			
Supply pump			Electronic control
Fuel injector			Electromagnetic control
Fuel tank capacity (reference)		(L {US gal, Imp gal})	60 {16, 13}
EMISSION SYSTEM			
EGR valve type			DC motor
Intake shutter valve type			DC motor
Catalytic converter type			Oxidation catalytic converter (monolithic catalyst)
Diesel particulate filter system type			Catalyzed diesel particulate filter
CHARGING SYSTEM			
Battery	Voltage	(V)	12
	Type and capacity (5-hour rate)	(A·h)	95D31L (64), 115D31L (70)
Generator	Output	(V-A)	12-90
	Regulated voltage		Controlled by PCM
	Self diagnosis function		
STARTING SYSTEM			
Starter	Type		Coaxial reduction
	Output	(kW)	2.2
CONTROL SYSTEM			
IAT sensor (Inside MAF)			Thermistor
MAF sensor			Hot-wire
IAT sensor No.2			Thermistor
Intake shutter valve position sensor			Hall element type
Boost sensor			Piezoelectric element
ECT sensor			Thermistor
CMP sensor			Magneto resistance element
CKP sensor			Magneto resistance element

Item	Specifications
	MZR-CD (RF Turbo)
APP sensor	Hall element type
EGR valve position sensor	Potentiometer
Exhaust gas temperature sensor (Lower)	Thermistor
Exhaust gas temperature sensor (Middle)	Thermistor
Exhaust gas temperature sensor (Upper)	Thermistor
Exhaust gas pressure sensor	Semiconductor type
HO2S	Zirconia element (Stoichiometric air/fuel ratio sensor)
BARO sensor (built into PCM)	Piezoelectric element
Fuel temperature sensor	Thermistor
Fuel pressure sensor	Piezoelectric element
Exhaust gas pressure correction temperature sensor	Thermistor
Neutral switch	ON/OFF
Clutch switch	ON/OFF
PSP switch	ON/OFF

Recommended engine oil

Item	Specifications
Grade	ACEA C1 or JASO DL-1
Viscosity (SAE)	5W-30

Engine Performance Curve

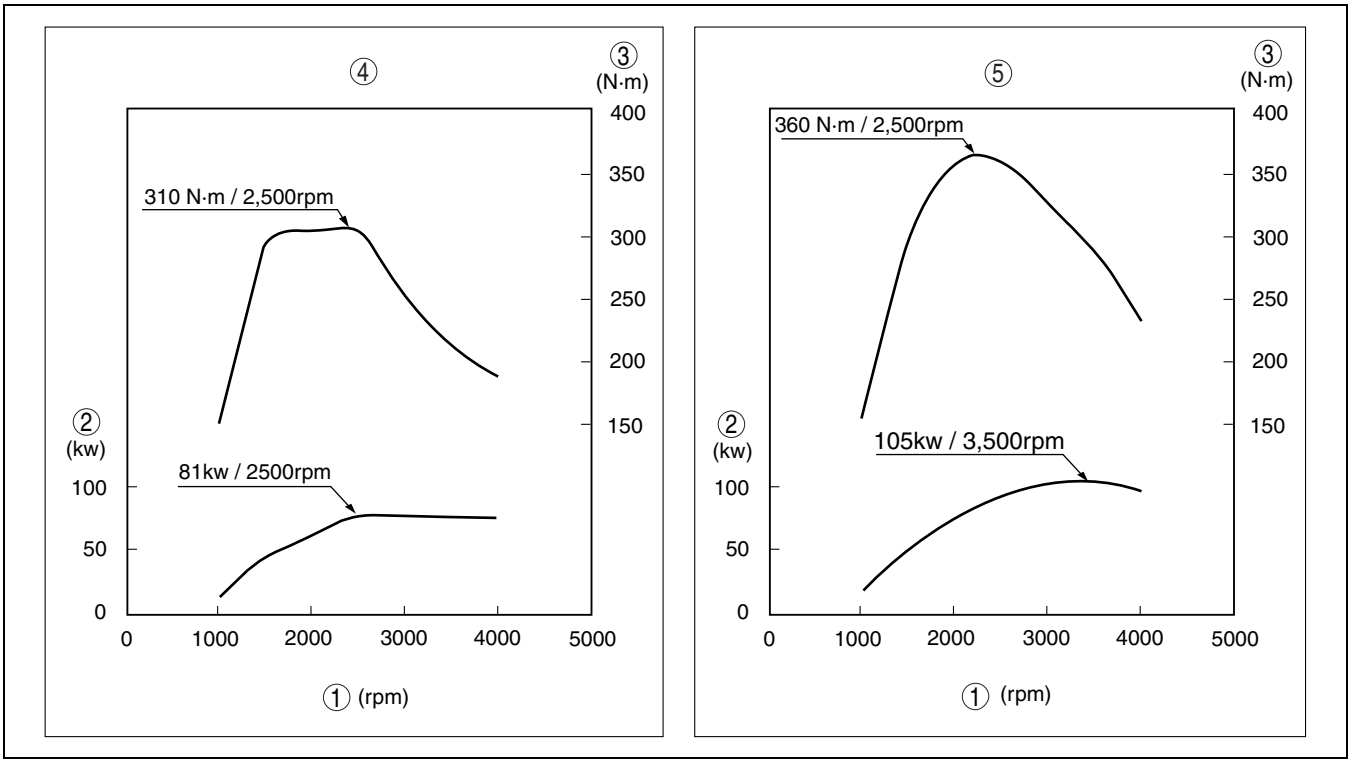

DPE000BT2001

1	Engine speed
2	Output
3	Torque

4	Standard power
5	Hi power

01–02A ON-BOARD DIAGNOSTIC [ENGINE CONTROL SYSTEM (L8, LF)]

ON-BOARD DIAGNOSTIC OUTLINE [L8, LF] 01–02A–1
DIAGNOSTIC TEST MODE [L8, LF]. . . . 01–02A–2
DTC DETECTION LOGIC AND CONDITIONS [L8, LF]. 01–02A–5
KOEO/KOER SELF-TEST [L8, LF]. 01–02A–10
PID/DATA MONITOR AND RECORD [L8, LF] 01–02A–11
SIMULATION TEST [L8, LF] 01–02A–13
DIAGNOSTIC SYSTEM WIRING DIAGRAM [L8, LF] 01–02A–14

ON-BOARD DIAGNOSTIC OUTLINE [L8, LF]

DPE010200000T07

Features

To meet the EOBD regulations	• Diagnostic test modes adopted
Improved serviceability	• DTCs adopted • KOEO/KOER self-test function adopted • PID/DATA monitor function adopted • Simulation test function adopted

Block Diagram

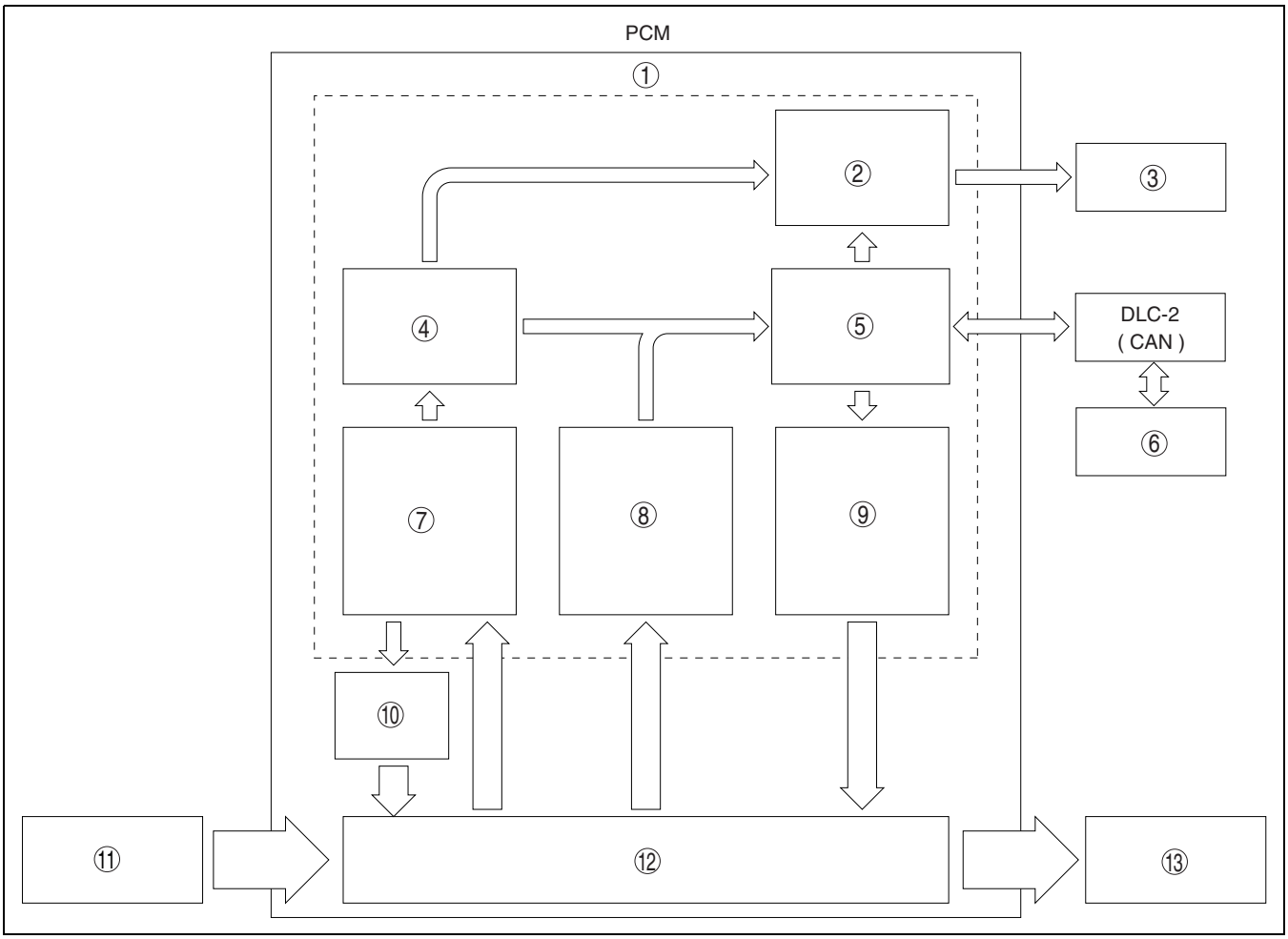

DPE102AT2601

1	OBD system
2	Malfunction indication function
3	MIL
4	Memory function
5	Tester communication function
6	WDS or equivalent
7	Detection function

8	PID data monitor function
9	Simulation test function
10	Fail-safe function
11	Input device
12	Engine control system
13	Output device

DIAGNOSTIC TEST MODE [L8, LF]

DPE010200000T08

- To meet EOBD regulations, the following diagnostic test modes have been adopted.

Diagnostic test mode	Item
Mode 01	Sending diagnostic data (PID data monitor/On-board system readiness test)
Mode 02	Sending freeze frame data
Mode 03	Sending emission-related malfunction code (DTC)
Mode 04	Clearing/resetting emission-related malfunction information
Mode 06	Sending intermittent monitoring system test results (DMTR)
Mode 07	Sending continuous monitoring system test results (pending code)
Mode 09	Request vehicle information

Sending Diagnostic Data

PID data monitor

- The PID data monitor items are shown below.

PID data monitor table

Support item	Unit	
Monitor status since DTCs cleared	No unit	
Fuel system loop status	Refer to list below.	
LOAD	%	
ECT	°C	°F
Short term fuel trim	%	
Long term fuel trim	%	
MAP	kPa	
Engine speed	rpm	
Vehicle speed	km/h	mph
Spark advance	°	
IAT	°C	°F
MAF	g/s	
Absolute TP	%	
O2S location	No unit	
Input voltage from front HO2S	V	
Input voltage from rear HO2S	V	
OBD requirement according to vehicle design	No unit	
Time since engine start	s	
Distance travelled while MIL is activated	km	miles
EGR valve control signal	%	
Purge solenoid valve control signal	%	
Number of warm-ups since DTCs cleared	No unit	
Distance travelled since DTCs cleared	km	miles
BARO	kPa	
Estimated catalyst converter temperature	°C	°F
Monitor status this DC	No unit	
PCM voltage	V	
Absolute load value	%	
Commanded equivalence ratio	No unit	
Relative TP	%	

Meaning of fuel system loop status

- The following information is displayed on the tester.
  - — Feedback stops: ECT is lower than the determined feedback zone.
  - — Feedback operating: HO2S being used for feedback is normal.
  - — Feedback stops: Open loop due to driving condition
  - — Feedback stops: Open loop due to detected system fault
  - — Feedback operating: Malfunction occurred in HO2S (rear) system

On-board system readiness test

- The items supported by the on-board system readiness test are shown below.

Continuous monitoring system
— HO2S heater
— Fuel system
— Misfire
— CCM
Intermittent monitoring system
— HO2S
— Catalyst

Sending Freeze Frame Data
- The Freeze Frame Data monitor items are shown below.

Freeze Frame Data monitor table

Support item	Unit	
DTC that caused required Freeze Frame Data storage	No unit	
Fuel system loop status	Refer to list below.	
LOAD	%	
ECT	°C	°F
Short term fuel trim	%	
Long term fuel trim	%	
MAP	kPa	
Engine speed	rpm	
Vehicle speed	km/h	mph
Spark advance	°	
IAT	°C	°F
MAF	g/s	
Absolute TP	%	
Time since engine start	s	
EGR valve control signal	%	
Purge solenoid valve control signal	%	
Number of warm-ups since DTCs cleared	No unit	
Distance travelled since DTCs cleared	km	miles
BARO	kPa	
Estimated catalyst converter temperature	°C	°F
PCM voltage	V	
Absolute load value	%	
Commanded equivalence ratio	No unit	
Relative TP	%	

Meaning of fuel system loop status
- The following information is displayed on the tester.
  — Feedback stops: ECT is lower than the determined feedback zone.
  — Feedback operating: HO2S being used for feedback is normal.
  — Feedback stops: Open loop due to driving condition
  — Feedback stops: Open loop due to detected system fault
  — Feedback operating: Malfunction occurred in HO2S (rear) system

Sending Emission-related Malfunction Code
- The DTCs are shown below.

DTC table

×: Applicable
—: Not applicable

DTC No.	Condition	MIL	DC	Monitor item	Memory function
P0031	Front HO2S heater circuit low input	ON	2	HO2S heater	×
P0032	Front HO2S heater circuit high input	ON	2	HO2S heater	×
P0037	Rear HO2S heater circuit low input	ON	2	HO2S heater	×
P0038	Rear HO2S heater circuit high input	ON	2	HO2S heater	×
P0101	MAF sensor circuit range/performance problem	ON	2	CCM	×
P0102	MAF sensor circuit low input	ON	1	CCM	×
P0103	MAF sensor circuit high input	ON	1	CCM	×

DTC No.	Condition	MIL	DC	Monitor item	Memory function
P0107	MAP sensor circuit low input	ON	1	CCM	×
P0108	MAP sensor circuit high input	ON	1	CCM	×
P0111	IAT sensor circuit range/performance problem	ON	2	CCM	×
P0112	IAT sensor circuit low input	ON	1	CCM	×
P0113	IAT sensor circuit high input	ON	1	CCM	×
P0117	ECT sensor circuit low input	ON	1	CCM	×
P0118	ECT sensor circuit high input	ON	1	CCM	×
P0121	TP sensor stuck closed	ON	2	CCM	×
P0122	TP sensor circuit low input	ON	1	CCM	×
P0123	TP sensor circuit high input	ON	1	CCM	×
P0125	Excessive time to enter closed loop fuel control	ON	2	CCM	×
P0132	Front HO2S circuit high input	ON	2	HO2S	×
P0133	Front HO2S circuit problem	ON	2	HO2S	×
P0134	Front HO2S no activity detected	ON	2	HO2S	×
P0138	Rear HO2S circuit high input	ON	2	HO2S	×
P0140	Rear HO2S no activity detected	ON	2	HO2S	×
P0300	Random misfire detected	Flash/ON	1 or 2	Misfire	×
P0301	Cylinder No.1 misfire detected	Flash/ON	1 or 2	Misfire	×
P0302	Cylinder No.2 misfire detected	Flash/ON	1 or 2	Misfire	×
P0303	Cylinder No.3 misfire detected	Flash/ON	1 or 2	Misfire	×
P0304	Cylinder No.4 misfire detected	Flash/ON	1 or 2	Misfire	×
P0327	KS circuit low input	ON	1	CCM	×
P0328	KS circuit high input	ON	1	CCM	×
P0335	CKP sensor circuit problem	ON	1	CCM	×
P0340	CMP sensor circuit problem	ON	1	CCM	×
P0403	EGR valve (stepper motor) circuit problem	ON	2	CCM	×
P0421	Warm up three way catalyst system efficiency below threshold	ON	2	Catalyst	×
P0443	Purge solenoid valve circuit problem	ON	2	CCM	×
P0480	Cooling fan control circuit problem	OFF	1	Other	×
P0500	VSS circuit problem	ON	2	CCM	×
P0505	IAC system problem	OFF	—	Other	—
P0506	Idle control system RPM lower than expected	ON	2	CCM	×
P0507	Idle control system RPM higher than expected	ON	2	CCM	×
P0511	IAC valve circuit problem	ON	1	CCM	×
P0602	PCM programming error	ON	1	CCM	×
P0610	PCM vehicle options error	ON	1	CCM	×
P0661	Variable intake air solenoid valve circuit low input	OFF	1	Other	×
P0662	Variable intake air solenoid valve circuit high input	OFF	1	Other	×
P0703	Brake switch input circuit problem	ON	2	CCM	×
P0704	CPP switch input circuit problem	ON	2	CCM	×
P0850	Neutral switch input circuit problem	ON	2	CCM	×
P1260	Immobilizer system problem	OFF	1	Other	—
P2009	Variable tumble solenoid valve circuit low input	ON	2	CCM	×
P2010	Variable tumble solenoid valve circuit high input	ON	2	CCM	×
P2096	Target A/F feedback system too lean	ON	2	Fuel system	×
P2097	Target A/F feedback system too rich	ON	2	Fuel system	×
P2177	Fuel system too lean at off idle	ON	2	Fuel system	×
P2178	Fuel system too rich at off idle	ON	2	Fuel system	×
P2187	Fuel system too lean at idle	ON	2	Fuel system	×
P2188	Fuel system too rich at idle	ON	2	Fuel system	×
P2195	Front HO2S signal stuck lean	ON	2	HO2S	×
P2196	Front HO2S signal stuck rich	ON	2	HO2S	×
P2228	BARO sensor circuit low input	ON	1	CCM	×

DTC No.	Condition	MIL	DC	Monitor item	Memory function
P2229	BARO sensor circuit high input	ON	1	CCM	×
P2502	Charging system voltage problem	OFF	1	Other	×
P2503	Charging system voltage low	OFF	1	Other	×
P2504	Charging system voltage high	OFF	1	Other	×
P2507	PCM B+ voltage low	ON	1	CCM	×

Sending Continuous Monitoring System Test Results
- These appear when a problem is detected in a monitored system.

1-drive cycle type
- If any problems are detected in the first drive cycle, pending codes will be stored in the PCM memory, as well as DTCs.
- After pending codes are stored, if the PCM determines that the system is normal in any future drive cycle, the PCM deletes the pending codes.

2-drive cycle type
- The code for a failed system is stored in the PCM memory in the first drive cycle. If the PCM determines that the system returned to normal or the problem was mistakenly detected, and deletes the pending code. If the problem is found in the second drive cycle too, the PCM determines that the system has failed, and stores the pending codes, and the DTCs.
- After pending codes are stored, if the PCM determines that the system is normal in any future drive cycle, the PCM deletes the pending codes.

DLC-2 Outline
- The DLC-2 located in the driver compartment is a service connector defined by EOBD regulations.
- The following are functions for each terminal.

Terminal name	Function
B+	Battery positive voltage
CAN_H (HS)	CAN communication line (HS)
CAN_L (HS)	CAN communication line (HS)
GND1	Ground (chassis)
GND2	Ground (signal)
CAN_H (MS)	CAN communication line (MS)
CAN_L (MS)	CAN communication line (MS)

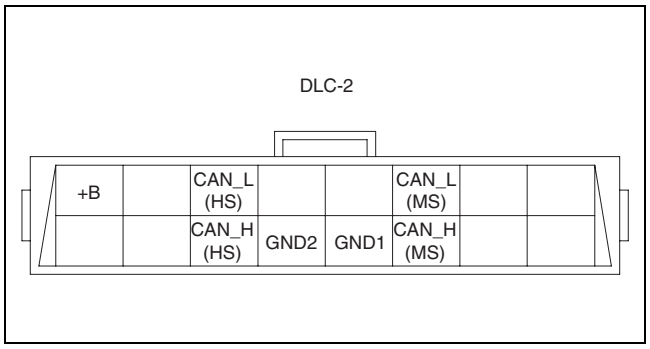

B3E0102T101

DTC DETECTION LOGIC AND CONDITIONS [L8, LF]

DPE010200000T09

P0031 Front HO2S heater circuit low input
- The PCM monitors the front HO2S heater control signal. If the PCM turns the front HO2S heater off but front HO2S heater circuit has low voltage, PCM determines that front HO2S heater circuit has malfunction.

P0032 Front HO2S heater circuit high input
- The PCM monitors the front HO2S heater control signal. If the PCM turns the front HO2S heater on but the front HO2S heater circuit has high voltage, the PCM determines that the front HO2S heater circuit has malfunction.

P0037 Rear HO2S heater circuit low input
- The PCM monitors the rear HO2S heater control signal at PCM terminal 2C. If the PCM turns the rear HO2S heater off but the rear HO2S heater circuit has low voltage, the PCM determines that the rear HO2S heater circuit has a malfunction.

P0038 Rear HO2S heater circuit high input
- The PCM monitors the rear HO2S heater control signal at PCM terminal 2C. If the PCM turns the rear HO2S heater on but the rear HO2S heater circuit has high voltage, the PCM determines that the rear HO2S heater circuit has a malfunction.

P0101 MAF sensor circuit range/performance problem
- The PCM monitors the mass intake air flow amount when the engine is running.
  - — If the mass intake air flow amount is **below 5.0 g/s {0.66 lb/min}** for **5 s** and engine speed is above 500 rpm with the engine running and throttle opening angle is **above 50%**, the PCM determines that detected mass intake air flow amount is too low.
  - — If the mass intake air flow amount is **above 96.0 g/s {12.7 lb/min}** for **5 s** and the engine speed is **below 2,000 rpm** with the engine running and engine coolant temperature, the PCM determines that detected

mass intake air flow amount is too high.

P0102 MAF sensor circuit low input

- The PCM monitors input voltage from the MAF sensor when the engine is running. If the input voltage at PCM terminal 1AC is **below 0.21 V**, the PCM determines that the MAF circuit has a malfunction.

P0103 MAF sensor circuit high input

- The PCM monitors input voltage from the MAF sensor when the engine is running. If the input voltage at PCM terminal 1AC is **above 4.9 V**, the PCM determines that the MAF circuit has a malfunction.

P0107 MAP sensor circuit low input

- The PCM monitors the input voltage from the MAP sensor when the intake air temperature is **above 10 °C {50 °F}**. If the input voltage at PCM terminal 2AL is **below 0.1V**, the PCM determines that the MAP sensor circuit has a malfunction.

P0108 MAP sensor circuit high input

- The PCM monitors the input voltage from the MAP sensor when the intake air temperature is **above 10 °C {50 °F}**. If the input voltage at PCM terminal 2AL is **above 4.9V**, the PCM determines that the MAP sensor circuit has a malfunction.

P0111 IAT circuit range/performance problem

- If the intake air temperature is higher than the engine coolant temperature by **40 °C {72 °F}** with the ignition key at on, the PCM determines that there is an IAT sensor performance problem.

P0112 IAT sensor circuit low input

- The PCM monitors the IAT sensor signal at PCM terminal 1AH. If the PCM detects the IAT sensor voltage **below 0.16 V**, the PCM determines that the IAT sensor circuit has malfunction.

P0113 IAT sensor circuit high input

- The PCM monitors the input voltage from the IAT sensor if input voltage at PCM terminal 1AH is **above 4.8 V**, the PCM determines that IAT sensor circuit has malfunction.

P0117 ECT sensor circuit low input

- The PCM monitors the ECT sensor signal at PCM terminal 2AK. If the PCM detects ECT sensor voltage **below 0.2 V**, the PCM determines that the ECT sensor circuit has a malfunction.

P0118 ECT sensor circuit high input

- The PCM monitors ECT sensor signal at PCM terminal 2AK. If the PCM detects ECT sensor voltage **above 4.6 V**, the PCM determines that the ECT sensor circuit has a malfunction.

P0121 TP sensor stuck closed

- If the PCM detects that the throttle valve opening angle is **below 12.5%** for **5 s** after the following conditions are met, the PCM determines that the TP is stuck closed:
  MONITORING CONDITION
  — Engine coolant temperature **above 70 °C {158 °F}**
  — MAF sensor signal **above 32.0 g/s {4.2 lb/min}**
- If the PCM detects that throttle valve opening angle is **above 50%** for **5 s** after the following conditions are met, the PCM determines that the TP is stuck open:
  MONITORING CONDITION
  — Engine speed **above 500 rpm**
  — MAF sensor signal **below 5 g/s {0.7 lb/min}**

P0122 TP sensor circuit low input

- If the PCM detects the TP sensor voltage at PCM terminal 2I is **below 0.1 V** while the engine is running, the PCM determines that the TP circuit has malfunction.

P0123 TP sensor circuit high input

- If the PCM detects the TP sensor voltage at PCM terminal 2I is **above 4.9 V** while the engine is running, the PCM determines that the TP circuit has malfunction.

P0125 Excessive time to enter closed loop fuel control

- The PCM monitors the ECT sensor signal at PCM terminal 2AK after the engine is started while the engine is cold. If the engine coolant temperature does not reach the expected temperature for a specified period, the PCM determines that it has taken an excessive amount of time for the engine coolant temperature to reach the temperature necessary to start closed-loop fuel control.

P0132 Front HO2S circuit high input

- The PCM monitors the input voltage from the front HO2S. If the input voltage from the front HO2S sensor is **above 1.2 V** for **0.8 s**, the PCM determines that circuit input is high.

P0133 Front HO2S circuit problem

- The PCM monitors the inversion cycle period, lean-to-rich response time and rich-to-lean response time of the sensor. The PCM calculates the average of the inversion cycle period-specified inversion cycles, average response time from lean-to-rich, and from rich-to-lean when the following conditions are met. If any exceeds the threshold, the PCM determines that the circuit has a malfunction.
  MONITORING CONDITIONS
  — Drive mode 3
  — The following conditions are met:
    - Calculation load **14.8—59.4%** (at **2,000 rpm**)
    - Engine speed **1,410—4,000 rpm**

- Vehicle speed is above **3.76 km/h {2.33 MPH}.**
- Engine coolant temperature is **above -10 °C {14 °F}.**
- Front HO2S signal inversion cycle is **above 10 cycles.**

P0134 Front HO2S no activity detected

- The PCM monitors the input voltage from the front HO2S when the following conditions are met. If the input voltage from the sensor never **exceeds 0.55 V** for **83.2 s**, the PCM determines that sensor circuit is not activated.

  MONITORING CONDITIONS

  — HO2S, HO2S heater and TWC repair verification drive mode

  — Following conditions are met
    - Engine speed is **above 1,500 rpm**.
    - Engine coolant temperature is **above 70 °C {158 °F}**.

P0138 Rear HO2S circuit high input

- The PCM monitors input voltage from rear HO2S. If the input voltage from the rear HO2S sensor is **above 1.2 V** for **0.8 s**, the PCM determines that circuit input is high.

P0140 Rear HO2S no activity detected

- The PCM monitors the input voltage from the rear HO2S when the following conditions are met. If the input voltage from the sensor never **exceeds 0.55 V** for **30.4 s**, the PCM determines that the sensor circuit is not activated.

  MONITORING CONDITIONS

  — HO2S, HO2S heater and TWC repair verification drive mode

  — The following conditions are met:
    - Engine speed is **above 1,500 rpm**.
    - Engine coolant temperature is **above 70 °C {158 °F}**.

P0300 Random misfire detected

- The PCM monitors the CKP sensor input signal interval time. The PCM calculates the change of interval time for each cylinder. If the change of interval time exceeds the preprogrammed criteria, the PCM detects a misfire in the corresponding cylinder. While the engine is running, the PCM counts number of misfires that occurred at **200 crankshaft revolutions** and **1,000 crankshaft revolutions** and calculates the misfire ratio for each crankshaft revolution. If the ratio exceeds the preprogrammed criteria, the PCM determines that a misfire, which can damage the catalytic converter or effect emission performance, has occurred.

P0301 Cylinder No.1 misfire detected

- The PCM monitors the CKP sensor input signal interval time. The PCM calculates the change of interval time for each cylinder. If the change of interval time exceeds the preprogrammed criteria, the PCM detects a misfire in the corresponding cylinder. While the engine is running, the PCM counts number of misfires that occurred at **200 crankshaft revolutions** and **1,000 crankshaft revolutions** and calculates the misfire ratio for each crankshaft revolution. If the ratio exceeds the preprogrammed criteria, the PCM determines that a misfire, which can damage the catalytic converter or effect emission performance, has occurred.

P0302 Cylinder No.2 misfire detected

- The PCM monitors the CKP sensor input signal interval time. The PCM calculates the change of interval time for each cylinder. If the change of interval time exceeds the preprogrammed criteria, the PCM detects a misfire in the corresponding cylinder. While the engine is running, the PCM counts the number of misfires that occurred at **200 crankshaft revolutions** and **1,000 crankshaft revolutions** and calculates the misfire ratio for each crankshaft revolution. If the ratio exceeds the preprogrammed criteria, the PCM determines that a misfire, which can damage the catalytic converter or effect emission performance, has occurred.

P0303 Cylinder No.3 misfire detected

- The PCM monitors the CKP sensor input signal interval time. The PCM calculates the change of interval time for each cylinder. If the change of interval time exceeds the preprogrammed criteria, the PCM detects a misfire in the corresponding cylinder. While the engine is running, the PCM counts the number of misfires that occurred at **200 crankshaft revolutions** and **1,000 crankshaft revolutions** and calculates the misfire ratio for each crankshaft revolution. If the ratio exceeds the preprogrammed criteria, the PCM determines that a misfire, which can damage the catalytic converter or effect emission performance, has occurred.

P0304 Cylinder No.4 misfire detected

- The PCM monitors the CKP sensor input signal interval time. The PCM calculates the change of interval time for each cylinder. If the change of interval time exceeds the preprogrammed criteria, the PCM detects a misfire in the corresponding cylinder. While the engine is running, the PCM counts the number of misfires that occurred at **200 crankshaft revolutions** and **1,000 crankshaft revolutions** and calculates the misfire ratio for each crankshaft revolution. If the ratio exceeds the preprogrammed criteria, the PCM determines that a misfire, which can damage the catalytic converter or affect emission performance, has occurred.

P0327 KS circuit low input

- The PCM monitors the input signal from the KS when the engine is running. If the input voltage between PCM terminals 2Q and 2R is **below 0.058 V**, the PCM determines that the knock sensor circuit has a malfunction.

P0328 KS circuit high input

- The PCM monitors the input signal from the KS when the engine is running. If the input voltage at PCM terminals between 2Q and 2R is **above 4.9 V**, the PCM determines that the knock sensor circuit has a

malfunction.

P0335 CKP sensor circuit problem

- If the PCM does not receive input voltage from the CKP sensor for **4.2 s** while the MAF is **2.0 g/s {0.26 lb/min} or above**, the PCM determines that the CKP sensor circuit has a malfunction.

P0340 CMP sensor circuit problem

- The PCM monitors the input voltage from the CMP sensor when the engine is running. If the PCM does not receive input voltage from the CMP sensor while the PCM receives input signal from the CKP sensor, the PCM determines that the CMP circuit has a malfunction.

P0403 EGR valve (stepper motor) circuit problem

- The PCM monitors input voltage from the EGR valve. If the voltage at PCM terminals 2AU, 2AR, 2AY and/or 2AV remain low or high, the PCM determines that the EGR valve circuit has a malfunction.

P0421 Warm up three way catalyst system efficiency below threshold

- The PCM monitors input voltages from the purge solenoid valve. If the voltage at PCM terminal 2AN remains low or high, the PCM determines that the purge solenoid valve circuit has a malfunction.
  MONITORING CONDITION
  — Engine speed **1,410—3,100 rpm**
  — Calculated WU-TWC temperature in PCM above **574 °C {1065 °F}**
  — Calculated load **15—60%** (at **2,000 rpm**)

P0443 Purge solenoid valve circuit problem

- The PCM monitors input voltages from the purge solenoid valve. If the voltage at PCM terminal 2AN remains low or high, the PCM determines that the purge solenoid valve circuit has a malfunction.

P0480 Fan control circuit problem

- The PCM monitors input voltages from the fan control module. If the voltage at PCM terminal 1W remains low or high, the PCM determines that the fan control circuit has a malfunction.

P0500 VSS circuit problem

- Wheel speed signal from ABS/DSC HU/CM is **below 3.7 km/h {2.3 mph}** when following conditions are met
  — Shift range in except P, N or R position (ATX)
  — Neutral switch and clutch pedal position switch are OFF (MTX)
  — Load is **above 40%**
  — Engine speed is **2,000 rpm or above**
  — Brake switch is OFF

P0505 IAC system problem

- The PCM cannot control idle speed toward target idle speed during the KOER self test.

P0506 Idle control system RPM lower than expected

- Actual idle speed is lower than expected by **100 rpm** for **14 s**, when brake pedal is depressed (brake switch is on).

P0507 Idle control system RPM higher than expected

- The actual idle speed is higher than expected by **200 rpm** for **14 s**, when the brake pedal is depressed (brake switch is on).

P0511 IAC valve circuit problem

- If the PCM detects that PCM terminal 2E voltage is above or below the threshold* when the IAC control duty target is **within 16—30%**, the PCM determines that the IAC valve circuit has a malfunction.
  *: Detected threshold value depends on battery voltage and IAC control signal duty value.

P0602 PCM programming error

- No configuration data in the PCM

P0610 PCM vehicle options error

- PCM data configuration error

P0661 Variable intake air solenoid valve circuit low input

- The PCM monitors the VIS control solenoid valve control signal at PCM terminal 2AJ. If the PCM turns the VIS control solenoid valve off but voltage at PCM terminal 2AJ still remains low, the PCM determines that the VIS control solenoid valve circuit has a malfunction.

P0662 Variable intake air solenoid valve circuit high input

- The PCM monitors the VIS control solenoid valve control signal at PCM terminal 2AJ. If the PCM turns VIS control solenoid valve on but the voltage at PCM terminal 2AJ still remains high, the PCM determines that the VIS control solenoid valve circuit has a malfunction.

P0703 Brake switch input circuit problem

- The PCM monitors changes in input voltage from the brake switch. If the PCM does not detect PCM terminal 1AU voltage changes while alternately accelerating and decelerating **8 times**, the PCM determines that the brake switch circuit has a malfunction.

P0704 CPP switch input circuit problem

- The PCM monitors changes in the input voltage from the clutch pedal position switch. If the PCM does not detect PCM terminal 1O voltage changes while the vehicle runs with vehicle speed **above 30 km/h {19 mph}** and stops **8 times**, the PCM determines that the clutch pedal position switch circuit has a malfunction.

P0850 Neutral switch input circuit problem

- The PCM monitors changes in the input voltage from the neutral switch. If the PCM does not detect PCM

terminal 1S voltage changes while running the vehicle with a vehicle speed **above 30 km/h {19 mph}** and the clutch pedal depressed and released **10 times** repeatedly, PCM determines that the neutral switch circuit has a malfunction.

P1260 Immobilizer system problem
- The instrument cluster detects an immobilizer system malfunction.

P2009 Variable tumble solenoid valve circuit low input
- The PCM monitors the variable tumble control solenoid valve control signal at PCM terminal 2AI. If the PCM turns the variable tumble control solenoid valve off but the voltage at PCM terminal 2AI still remains low, the PCM determines that the variable tumble control solenoid valve circuit has a malfunction.

P2010 Variable tumble solenoid valve circuit high input
- The PCM monitors variable the tumble control solenoid valve control signal at PCM terminal 2AI. If the PCM turns the variable tumble control solenoid valve on but voltage at PCM terminal 2AI still remains high, the PCM determines that the variable tumble control solenoid valve circuit has a malfunction.

P2096 Target A/F feedback system too lean
- The PCM monitors the target A/F fuel trim when under the target A/F feedback control. If the fuel trim is more than the specification, the PCM determines that the target A/F feedback system is too lean.

P2097 Target A/F feedback system too rich
- The PCM monitors the target A/F fuel trim when under the target A/F feedback control. If the fuel trim is less than the specification, the PCM determines that the target A/F feedback system is too rich.

P2177 Fuel system too lean at off idle
- The PCM monitors the short term fuel trim (SHRTFT), long term fuel trim (LONGFT) during the closed loop fuel control at off-idle. If the LONGFT or the sum total of these fuel trims exceed the preprogrammed criteria, the PCM determines that the fuel system is too lean at off-idle.

P2178 Fuel system too rich at off idle
- The PCM monitors the short term fuel trim (SHRTFT), long term fuel trim (LONGFT) during the closed loop fuel control at off-idle. If the LONGFT or the sum total of these fuel trims exceed the preprogrammed criteria, the PCM determines that the fuel system is too rich at off-idle.

P2187 Fuel system too lean at idle
- The PCM monitors short term fuel trim (SHRTFT) and long term fuel trim (LONGFT) during the closed loop fuel control at idle. If the LONGFT or the sum total of these fuel terms exceed the preprogrammed criteria, the PCM determines that the fuel system is too lean at idle.

P2188 Fuel system too rich at idle
- The PCM monitors short term fuel trim (SHRTFT), long term fuel trim (LONGFT) during the closed loop fuel control at idle. If the LONGFT or the sum total of these fuel terms exceed the preprogrammed criteria, the PCM determines that the fuel system is too rich at idle.

P2195 Front HO2S signal stuck lean
- The PCM monitors the front HO2S output voltage when the following conditions are met. If the output voltage is less than **0.45 V** for **41 s**, the PCM determines that the front HO2S signal remains lean.
  MONITORING CONDITION
  — Fuel injection control system status: feedback zone
  — ECT: **more than 70 °C {158 °F}**
  — Engine speed: **more than 1,500 rpm**

P2196 Front HO2S signal stuck rich
- The PCM monitors the front HO2S output voltage when the following conditions are met. If output voltage is more than **0.45 V** for **41 s**, the PCM determines that the front HO2S signal remains lean.
  MONITORING CONDITION
  — Fuel injection control system status: feedback zone
  — ECT: **more than 70 °C {158 °F}**
  — Engine speed: **more than 1,500 rpm**

P2228 BARO sensor circuit low input
- The PCM monitors the input voltage from the BARO sensor. If the input voltage at PCM terminal 1AG is **below 1.99 V**, the PCM determines that the BARO sensor circuit has a malfunction.

P2229 BARO sensor circuit high input
- The PCM monitors the input voltage from the BARO sensor. If the input voltage at PCM terminal 1AG is **above 4.45 V**, the PCM determines that the BARO sensor circuit has a malfunction.

P2502 Charging system voltage problem
- The PCM determines that the generator output voltage is **above 17 V** or battery voltage is **below 11 V** while the engine is running.

P2503 Charging system voltage low
- The PCM needs **more than 20 A** from the generator, and judges generator output voltage to be **below 8.5 V** while the engine is running.

P2504 Charging system voltage high
- The PCM determines that the generator output voltage is **above 18.5 V** or battery voltage is **above 16.0 V** while the engine is running.

P2507 PCM B+ voltage low

- The PCM monitors the voltage at the back-up battery positive terminal at PCM terminal 1BA. If the PCM detected battery positive terminal voltage **below 2.5 V** for **2 s**, the PCM determines that the backup voltage circuit has a malfunction.

KOEO/KOER SELF-TEST [L8, LF]

DPE010200000T10

- The self-test function consists of the KOEO (Key On, Engine Off) self-test, performed when the ignition switch is turned to the ON position and the engine is stopped; and the KOER (Key On, Engine Running) self-test, performed when idling. If a malfunction is detected when either self-test is executed, a DTC is displayed on the WDS or equivalent. Using the self-test function, the present malfunction or a successful repair is readily confirmed. Refer to the self-test function table for the corresponding DTCs.

KOEO (Key ON, Engine Off) Self-test

- The KOEO self-test is a powertrain control system self-diagnosis, performed when the ignition switch is turned to the ON position and the engine is stopped. A KOEO self-test begins when the connected WDS or equivalent sends an execute command to the PCM.
- As the KOEO self-test is performed, the PCM performs the inspection for set DTCs and if a malfunction is detected the DTC is displayed on the WDS or equivalent.

KOER (Key ON, Engine Running) Self-test

- The KOER self-test is a powertrain control system self-diagnosis, performed when the ignition switch is turned to the ON position and the engine is idling. A KOER self-test begins when the connected WDS or equivalent sends an execute command to the PCM.
- As the KOER self-test is performed, the PCM performs the inspection for set DTCs and if a malfunction is detected the DTC is displayed on the WDS or equivalent.

KOEO/KOER self-test table

×: Applicable
—: Not applicable

DTC No.	Condition	Test condition	
		KOEO	KOER
P0031	Front HO2S heater circuit low input	×	×
P0032	Front HO2S heater circuit high input	×	×
P0037	Rear HO2S heater circuit low input	×	×
P0038	Rear HO2S heater circuit high input	×	×
P0101	MAF sensor circuit range/performance problem	—	—
P0102	MAF sensor circuit low input	×	×
P0103	MAF sensor circuit high input	×	×
P0107	MAP sensor circuit low input	×	×
P0108	MAP sensor circuit high input	×	×
P0111	IAT sensor circuit range/performance problem	—	—
P0112	IAT sensor circuit low input	×	×
P0113	IAT sensor circuit high input	×	×
P0117	ECT sensor circuit low input	×	×
P0118	ECT sensor circuit high input	×	×
P0121	TP sensor stuck closed	—	—
P0122	TP sensor circuit low input	×	×
P0123	TP sensor circuit high input	×	×
P0125	Excessive time to enter closed loop fuel control	—	—
P0132	Front HO2S circuit high input	×	×
P0133	Front HO2S circuit problem	—	—
P0134	Front HO2S no activity detected	—	×
P0138	Rear HO2S circuit high input	×	×
P0140	Rear HO2S no activity detected	—	×
P0300	Random misfire detected	—	×
P0301	Cylinder No.1 misfire detected	—	×
P0302	Cylinder No.2 misfire detected	—	×
P0303	Cylinder No.3 misfire detected	—	×
P0304	Cylinder No.4 misfire detected	—	×
P0327	KS circuit low input	×	×
P0328	KS circuit high input	×	×

DTC No.	Condition	Test condition	
		KOEO	KOER
P0335	CKP sensor circuit problem	—	—
P0340	CMP sensor circuit problem	—	—
P0403	EGR valve (stepper motor) circuit problem	×	×
P0421	Warm up three way catalyst system efficiency below threshold	—	—
P0443	Purge solenoid valve circuit problem	×	×
P0480	Cooling fan control circuit problem	×	×
P0500	VSS circuit problem	—	—
P0505	IAC system problem	—	×
P0506	Idle control system RPM lower than expected	—	—
P0507	Idle control system RPM higher than expected	—	—
P0511	IAC valve circuit problem	×	×
P0602	PCM programming error	×	×
P0610	PCM vehicle options error	×	×
P0661	Variable intake air solenoid valve circuit low input	×	×
P0662	Variable intake air solenoid valve circuit high input	×	×
P0703	Brake switch input circuit problem	—	—
P0704	CPP switch input circuit problem	—	—
P0850	Neutral switch input circuit problem	—	—
P1260	Immobilizer system problem	×	—
P2009	Variable tumble solenoid valve circuit low input	×	×
P2010	Variable tumble solenoid valve circuit high input	×	×
P2096	Target A/F feedback system too lean	—	—
P2097	Target A/F feedback system too rich	—	—
P2177	Fuel system too lean at off idle	—	×
P2178	Fuel system too rich at off idle	—	×
P2187	Fuel system too lean at idle	—	×
P2188	Fuel system too rich at idle	—	×
P2195	Front HO2S signal stuck lean	—	—
P2196	Front HO2S signal stuck rich	—	—
P2228	BARO sensor circuit low input	×	×
P2229	BARO sensor circuit high input	×	×
P2502	Charging system voltage problem	—	×
P2503	Charging system voltage low	—	×
P2504	Charging system voltage high	—	×
P2507	PCM B+ voltage low	×	×

PID/DATA MONITOR AND RECORD [L8, LF]

DPE010200000T11

- The PID/DATA monitor items are shown below.

PID/DATA monitor item table

—: Not applicable

Item	Definition	Unit/Condition			PCM terminal
AC_REQ	A/C request signal in PCM	On/Off			1AP
ACCS	A/C relay control signal in PCM	On/Off			1AN
ALTF	Generator field coil control signal in PCM	%			2AQ
ALTT V	Input voltage from generator	V			2AM
ARPMDES	Target engine speed	RPM			—
B+	Input voltage from battery	V			1BE
BARO	BARO	kPa	Bar	psi	1AG
	Input voltage from BARO sensor	V			
BOO	Input signal from brake switch	On/Off			1AU
CATT11_DSD	Estimated catalyst converter temperature	°C	°F		—
CHRGLP	Generator warning light control signal in PCM	On/Off			—
COLP	Input signal from refrigerant pressure switch (medium-pressure)	On/Off			1R

Item	Definition	Unit/Condition			PCM terminal
CPP	Input signal from CPP switch	On/Off			1O
CPP/PNP	Input signal from neutral switch	Drive/Neutral			1S
DTCCNT	DTC count (includes those needing no action)	No unit			—
ECT	ECT	°C	°F		2AK
	Input voltage from ECT sensor	V			
EQ_RAT11_DSD	Desired Equivalence Ratio (Lambda)	—			—
EVAPCP	Purge solenoid valve control signal in PCM	%			2AN
FAN_DUTY	Variable fan duty cycle	%			1W
FP	Fuel pump relay control signal in PCM	On/Off			1AR
FUELPW	Fuel injection duration in PCM	ms			2AZ, 2BB, 2BC, 2BD
FUELSYS	Fuel system loop status	OL/CL/OL Drive/ OL Fault/CL Fault			—
GENVDSD	Target generator voltage	V			—
HTR11	Front HO2S heater control signal in PCM	On/Off			2G
HTR12	Rear HO2S heater control signal in PCM	On/Off			2C
IAC	Throttle actuator control signal in PCM	%			2E, 2F
IAT	IAT	°C	°F		1AH
	Input voltage from IAT sensor	V			
IMRC	Intake manifold runner control	On/Off			2AI
IMTV	Intake manifold tuning valve	On/Off			2AJ
INGEAR	In gear	On/Off			1O, 1S
IVS	Idle validation	Idle/Off Idle			—
KNOCKR	Spark retard value to prevent knocking	°			2Q, 2R
LOAD	LOAD	%			—
LONGFT1	Long fuel trim	%			—
MAF	MAF	g/s			1AC
	Input voltage from MAF sensor	V			
MAP	MAP sensor	kPa	Bar	psi	2AL
		V			
MIL	MIL control signal in PCM	On/Off			—
MIL_DIS	Distance travelled while MIL is activated	km	mile		—
O2S11	Front HO2S output current	V			2AG
O2S12	Input voltage from rear HO2S	V			2AH
RFCFLAG	Readiness function code	Learnt	Not Learnt		—
RO2FT1	Target A/F feedback system status	No unit			2AH
RPM	Engine speed	RPM			2Y, 2Z
SEGRP	EGR valve stepping motor position	Step			2AR, 2AU, 2AV, 2AY
SELTESTDTC	DTC count by KOEO/KOER self-test	—			—
SEGRP_DSD	Desired EGR valve position	%			—
SHRTFT1	Short fuel trim	%			—
SHRTFT11	Target A/F fuel trim (front)	%			2AG
SHRTFT12	Target A/F fuel trim (rear)	%			2AH
SPARKADV	Spark advance in PCM	°			2U, 2V
test	Test mode	On/Off			—
TIRESIZE	Tire revolution per mile	No unit			—
TP	Input voltage from TP sensor	%			2I
	TP from TP sensor	V			
TP 1	TP sensor 1	%			2I
TP REL	Relative TP	%			2I
TPCT	Minimum input voltage from TP sensor at throttle closing	V			2I
VSS	Vehicle speed	KPH	MPH		1J

SIMULATION TEST [L8, LF]

DPE010200000T12

- The simulation items are shown below.

Simulation item table

×: Applicable
—: Not applicable

Item	Applicable component	Unit/condition	Test condition		PCM terminal
			KOEO	KOER	
ACCS	A/C relay	On/Off	×	×	1AN
ALTF	Generator (field coil)	%	—	×	2AQ
EVAPCP	Purge solenoid valve	%	×	×	2AN
FAN_DUTY	Variable fan duty cycle	%	×	×	1W
FP	Fuel pump relay	On/Off	×	×	1AR
FUELPW1	Fuel injector (FP1, RP1)	%	×	×	2AZ, 2BB, 2BC, 2BD
GENVDSD	Target generator voltage	V	—	×	—
HTR11	Front HO2S heater	On/Off	×	×	2G
HTR12	Rear HO2S heater	On/Off	×	×	2C
IMRC	Intake manifold runner control	On/Off	×	×	2AI
IMTV	Intake manifold tuning valve	On/Off	×	×	2AJ
INJ_1	Injector No.1	OFF/—	—	×	2BB
INJ_2	Injector No.2	OFF/—	—	×	2BC
INJ_3	Injector No.3	OFF/—	—	×	2BD
INJ_4	Injector No.4	OFF/—	—	×	2AZ
SEGRP	EGR valve stepping motor position	Step	×	×	2AR, 2AU, 2AV, 2AY
test	Terminal TEN	On/Off	×	×	—

DIAGNOSTIC SYSTEM WIRING DIAGRAM [L8, LF]

DPE010200000T13

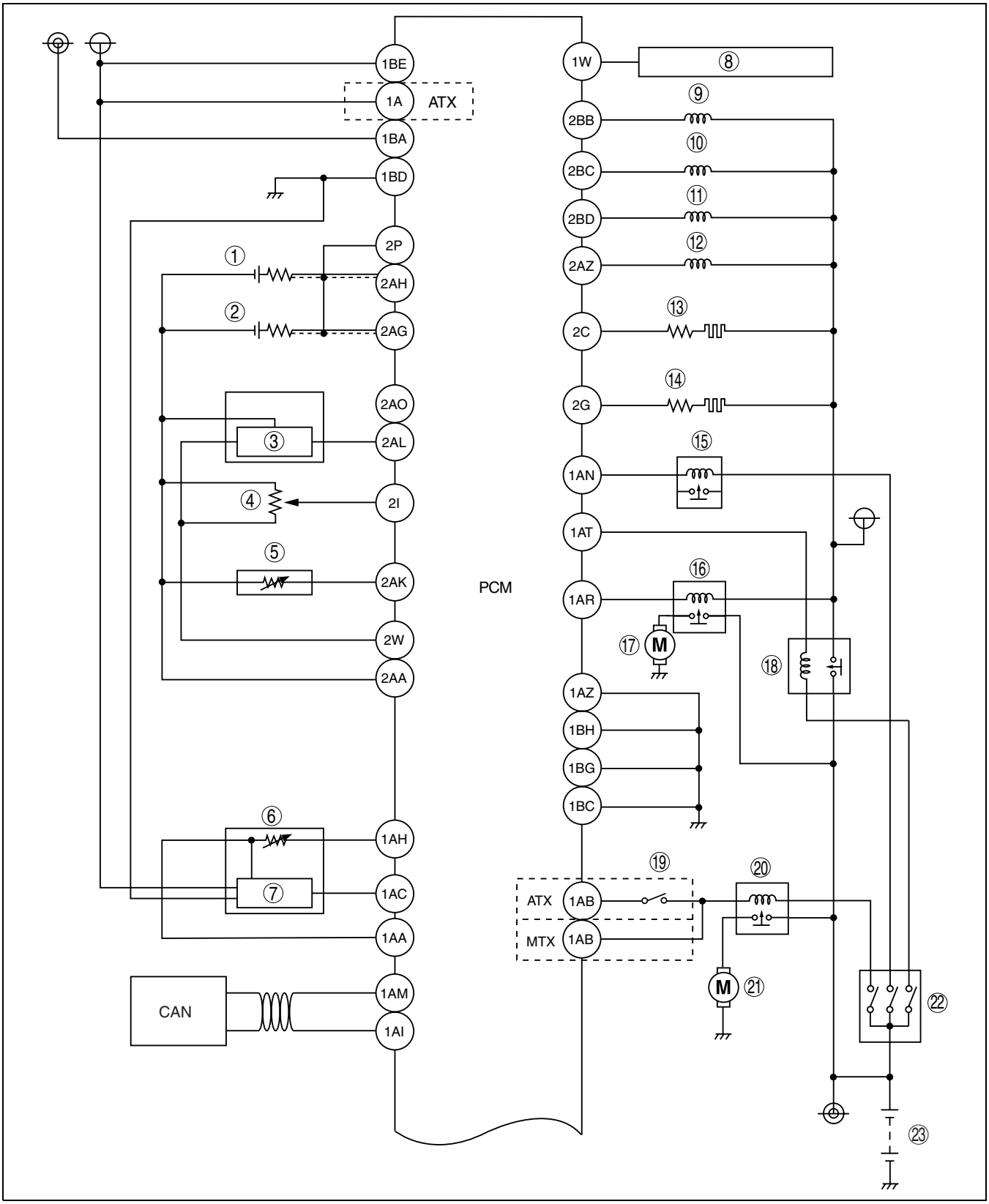

DPE0140ZT2004

1	HO2S (rear)
2	HO2S (front)
3	MAP sensor
4	TP sensor
5	ECT sensor

6	IAT sensor
7	MAF sensor
8	Fan control module
9	Fuel injector No.1
10	Fuel injector No.2
11	Fuel injector No.3
12	Fuel injector No.4
13	HO2S heater (rear)
14	HO2S heater (front)
15	A/C relay
16	Fuel pump relay
17	Fuel pump
18	Main relay
19	TR switch
20	Starter relay
21	Starter
22	Ignition switch
23	Battery

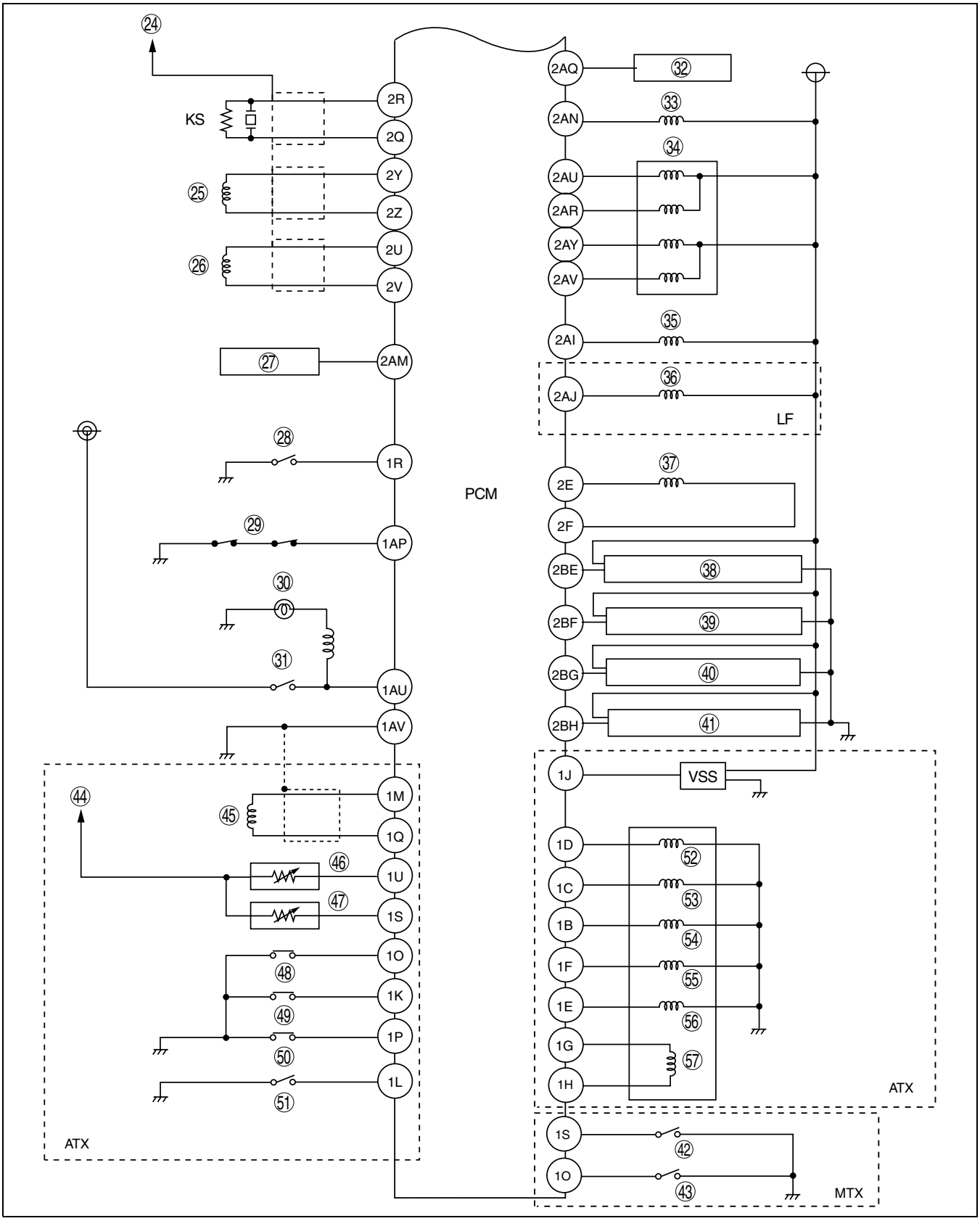

DPE102ZT2005

24	To terminal 2P
25	CKP sensor
26	CMP sensor
27	Generator
28	Refrigerant pressure switch (medium)

29	Refrigerant pressure switch (high, low)
30	Brake light
31	Brake switch
32	Generator
33	Purge solenoid valve
34	EGR valve
35	Variable tumble solenoid valve
36	Variable intake air solenoid valve (LF)
37	IAC valve
38	Ignition coil No.1
39	Ignition coil No.2
40	Ignition coil No.3
41	Ignition coil No.4
42	Neutral switch
43	CPP switch
44	To terminal 1AA
45	Input/turbine speed sensor
46	TFT sensor
47	TR switch
48	M range switch
49	Up switch
50	Down switch
51	Oil pressure switch
52	Shift solenoid C
53	Shift solenoid B
54	Shift solenoid A
55	Shift solenoid E
56	Shift solenoid D
57	Pressure control solenoid

01–10A MECHANICAL [L8, LF]

ENGINE STRUCTURAL VIEW [L8, LF] . 01–10A–1
CYLINDER HEAD COVER CONSTRUCTION [L8, LF] 01–10A–1
CYLINDER HEAD CONSTRUCTION [L8, LF] 01–10A–2
CYLINDER HEAD GASKET CONSTRUCTION [L8, LF] 01–10A–2
CYLINDER BLOCK CONSTRUCTION [L8, LF] 01–10A–3
CRANKSHAFT, MAIN BEARING CONSTRUCTION [L8, LF] 01–10A–4
CRANKSHAFT PULLEY CONSTRUCTION [L8, LF] 01–10A–6
ENGINE FRONT COVER CONSTRUCTION [L8, LF] 01–10A–6
PISTON, PISTON RING, PISTON PIN CONSTRUCTION [L8, LF] 01–10A–7
CONNECTING ROD, CONNECTING ROD BEARING CONSTRUCTION [L8, LF] . . 01–10A–9
DRIVE BELT CONSTRUCTION [L8, LF] . 01–10A–10
ENGINE MOUNT OUTLINE [L8, LF] 01–10A–10
ENGINE MOUNT CONSTRUCTION [L8, LF] 01–10A–11
VALVE MECHANISM OUTLINE [L8, LF] . 01–10A–13
VALVE MECHANISM STRUCTURAL VIEW [L8, LF] 01–10A–14
VALVE, VALVE SPRING, VALVE SEAL, VALVE GUIDE CONSTRUCTION [L8, LF] 01–10A–14
CAMSHAFT CONSTRUCTION [L8, LF] . 01–10A–15
CAMSHAFT SPROCKET CONSTRUCTION [L8, LF] 01–10A–17
CRANKSHAFT SPROCKET CONSTRUCTION [L8, LF] 01–10A–18
TIMING CHAIN, CHAIN TENSIONER CONSTRUCTION [L8, LF] 01–10A–19
TAPPET CONSTRUCTION [L8, LF] 01–10A–20

ENGINE STRUCTURAL VIEW [L8, LF]

DPE011002000T01

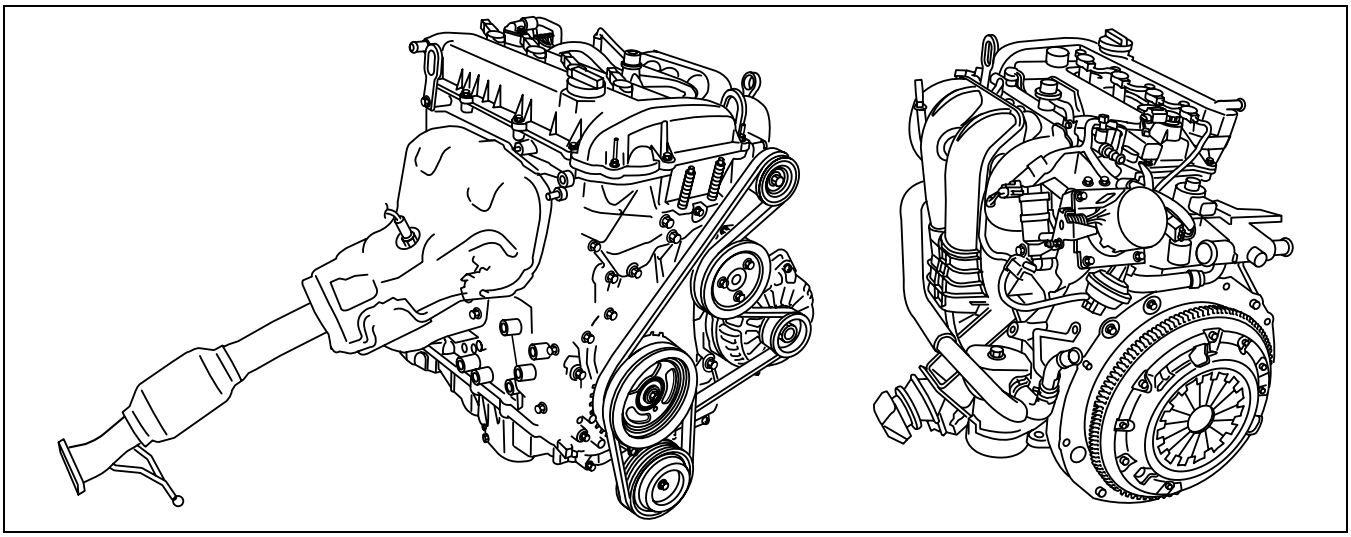

B3E2206T001

CYLINDER HEAD COVER CONSTRUCTION [L8, LF]

DPE011010220T01

- The cylinder head cover is made of integrated plastic, which is lightweight and sound absorbent.
- The oil filler cap is a bayonet type. The boss for installing the camshaft position (CMP) sensor is provided at the rear of the cylinder head cover.

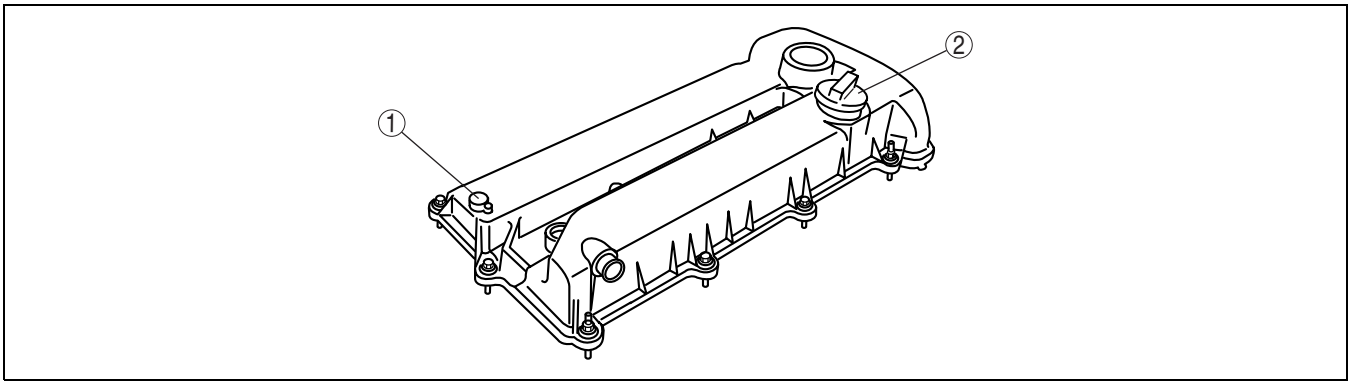

B3E2224N119

1	Camshaft position (CMP) sensor

2	Oil filler cap

CYLINDER HEAD CONSTRUCTION [L8, LF]

DPE011010100T01

- The cylinder head is made of a high heat conductive, lightweight aluminium alloy, which is quenched.
- Compact, pentroof-type combustion chambers have been adopted. The spark plugs are mounted at the top of the combustion chambers to improve combustion efficiency.
- The intake/exhaust port layout is a cross flow type, (the angle between two valves is 39°, the two intake valves and the two exhaust valves per cylinder) which improves air intake/exhaust efficiency.
- The cylinder head bolts are plastic region tightening bolts to be tightened in five steps to insure tightening stability.

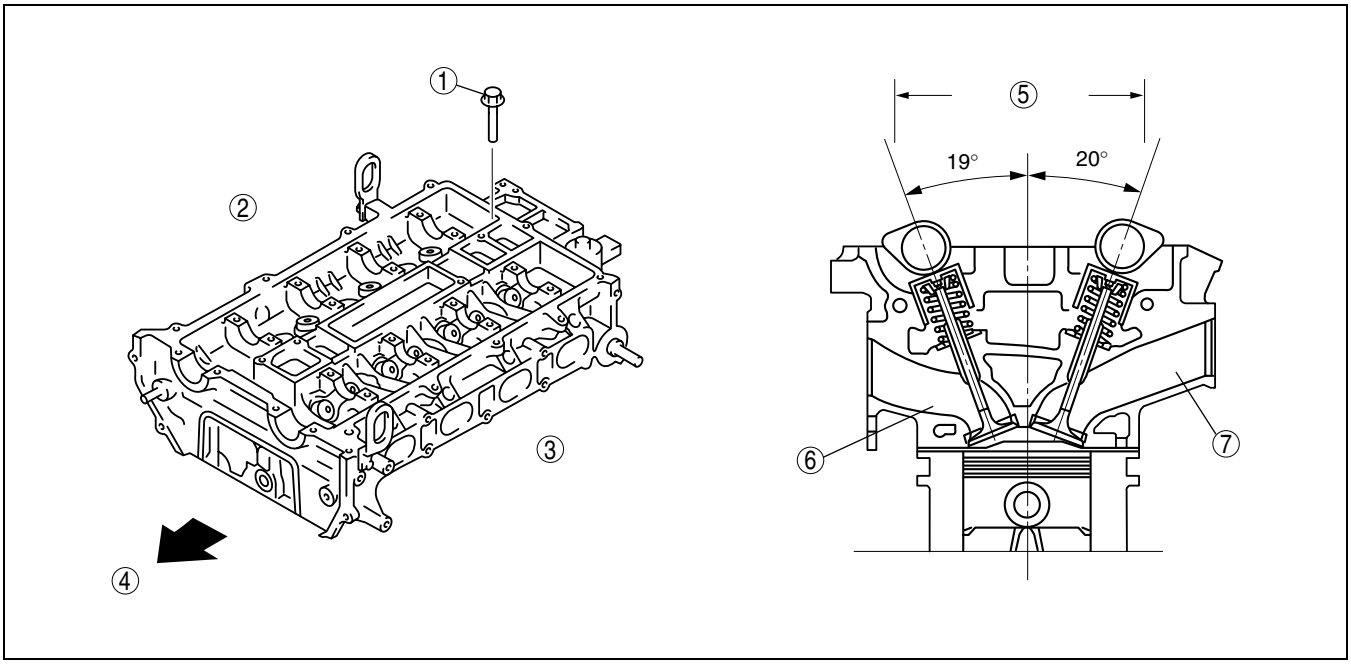

B3E0110T060

1	Cylinder head bolt
2	Exhaust side
3	Intake side
4	Engine front side

5	Angle between two valves
6	Exhaust port
7	Intake port

CYLINDER HEAD GASKET CONSTRUCTION [L8, LF]

DPE011010271T01

- Cylinder head gaskets are two layer-metal gasket.

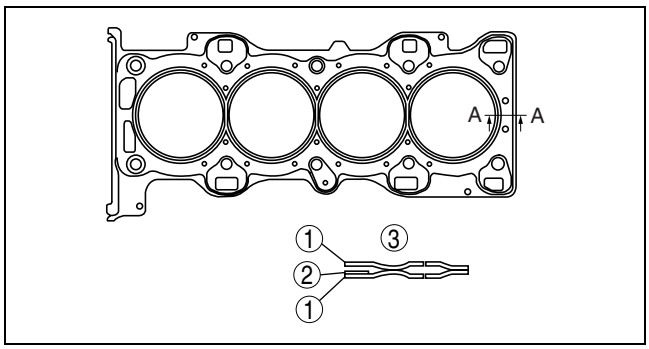

DPEO114BT110

1	Bead plate
2	Shim
3	A-A sectional view

CYLINDER BLOCK CONSTRUCTION [L8, LF]

DPE011010300T01

- The cylinder block is made of aluminum alloy, which is cast with the cast iron liner, improving heat radiation and decreasing weight.
- The cylinder block is a deep skirt type and forms a ladder frame structure with the integrated main bearing cap. The water jacket of the cylinder block is a closed deck type. Its higher rigidity reduces vibration and noise.
- The cylinder block has an oil separator cover on the opposite side of the fresh air intake, the PCV (positive crankcase ventilation) valve and the oil separator function with an part for installing the PCV valve, to improve blow-by gas ventilation efficiency.
- There is no positioning tab where the upper and lower main bearings are installed.
- The main bearing cap bolts are elastic region tightening bolts to be tightened in two steps to insure tightening stability.

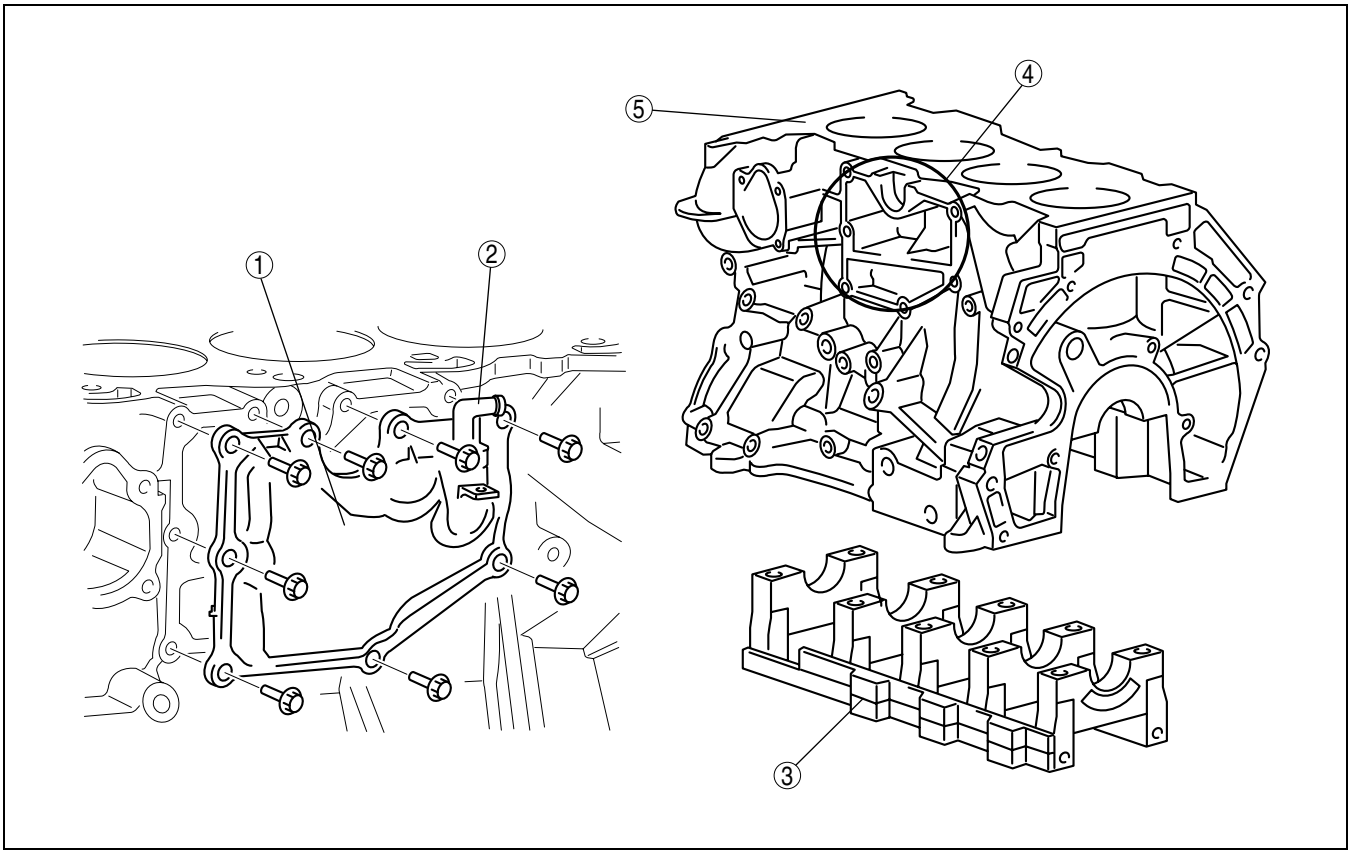

B3E0110T051

1	Oil separator cover
2	PCV valve
3	Main bearing cap

4	Oil separator cover attachment part
5	Cylinder block

- The service hole for installing the **SST**, which is used for detecting the No.1 cylinder TDC position, is located at the right side of the cylinder block. The TDC position can be detected when the **SST** edge touches the cutting surface of the No.1 counter weight.

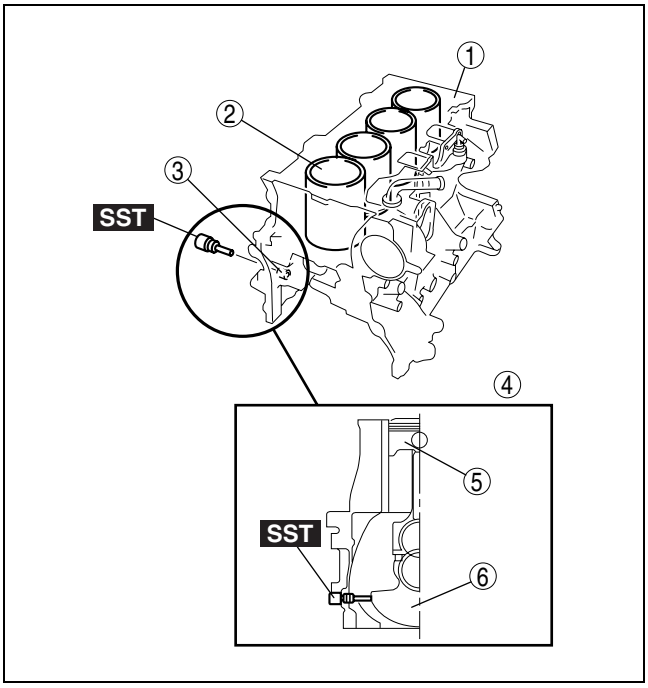

B3E0110T052

1	Cylinder block
2	No.1 cylinder
3	Service hole
4	No.1 cylinder TDC position
5	No.1 piston
6	Crankshaft counter weight

CRANKSHAFT, MAIN BEARING CONSTRUCTION [L8, LF]

DPE011011301T01

- A five axle-hole, four counter weight cast iron crankshafts have been adopted.
- There is no positioning key where the crankshaft sprocket and crankshaft pully are installed. The crankshaft sprocket must be installed using the **SST** with the No.1 cylinder aligned with TDC position. Tightening pressure on the tightening bolt is used to secure the crankshaft sprocket and crankshaft pulley.

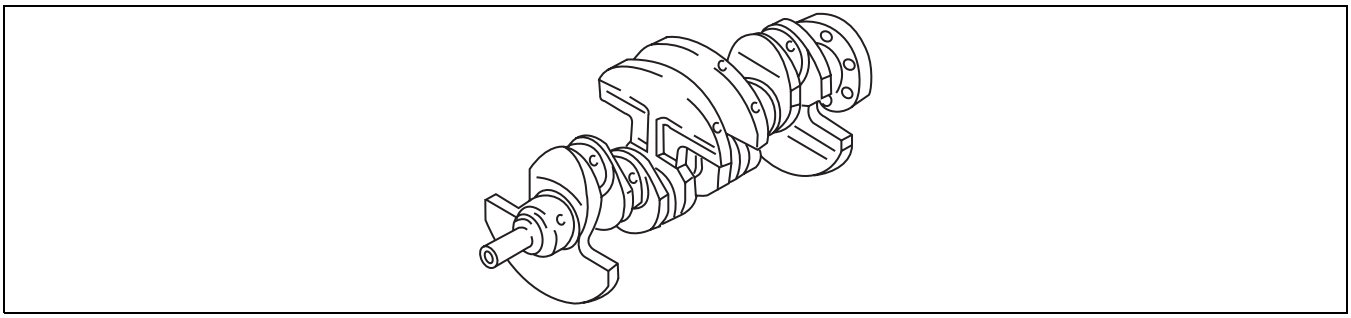

B3E2224N126

- An oil line for supplying oil to each journal is provided in the crankshaft. Crank pins and fillets on both sides of the journal are rolled to bear heavy loads.

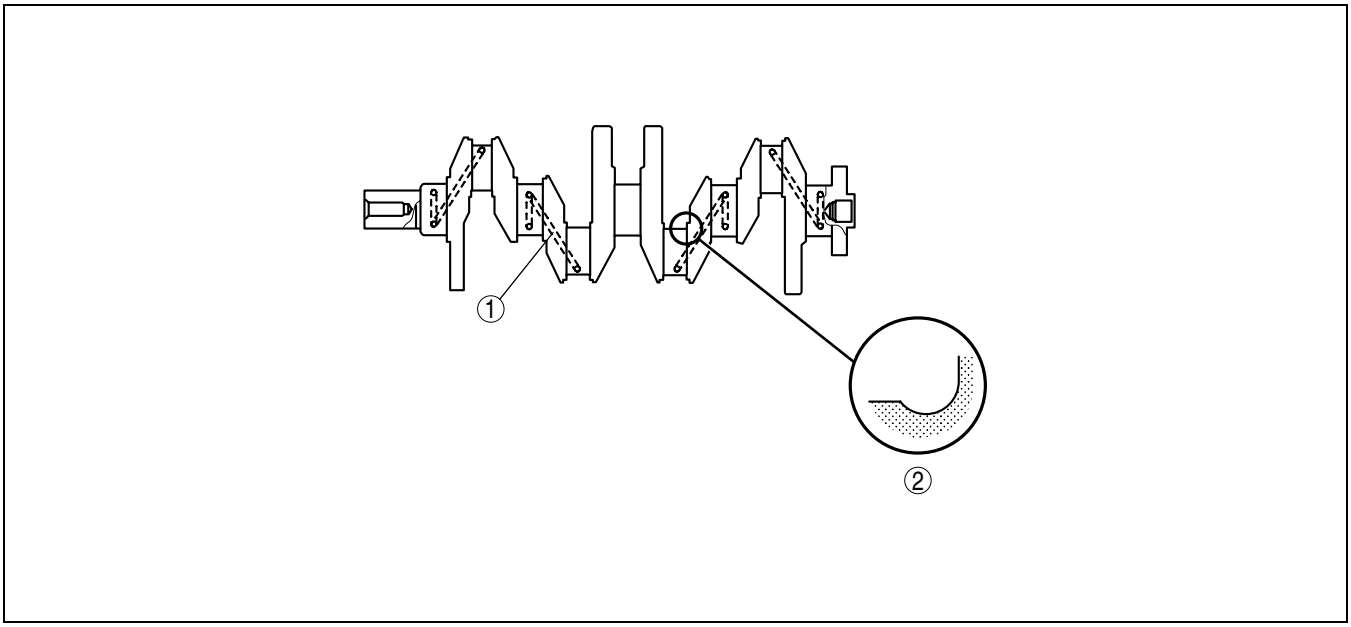

B3E0110T053

1	Oil passage

2	Fillet roll area

- Upper and lower main bearings are made of aluminum alloy and the upper side No.3 journal bearing is integrated with the thrust bearing. The upper main bearing has oil grooves and oil holes.
- There is no upper and lower bearings positioning tab for installing the main journal.
- Measure and attach the main bearings (upper c lower) so that they are positioned at the center of the main bearing cap.

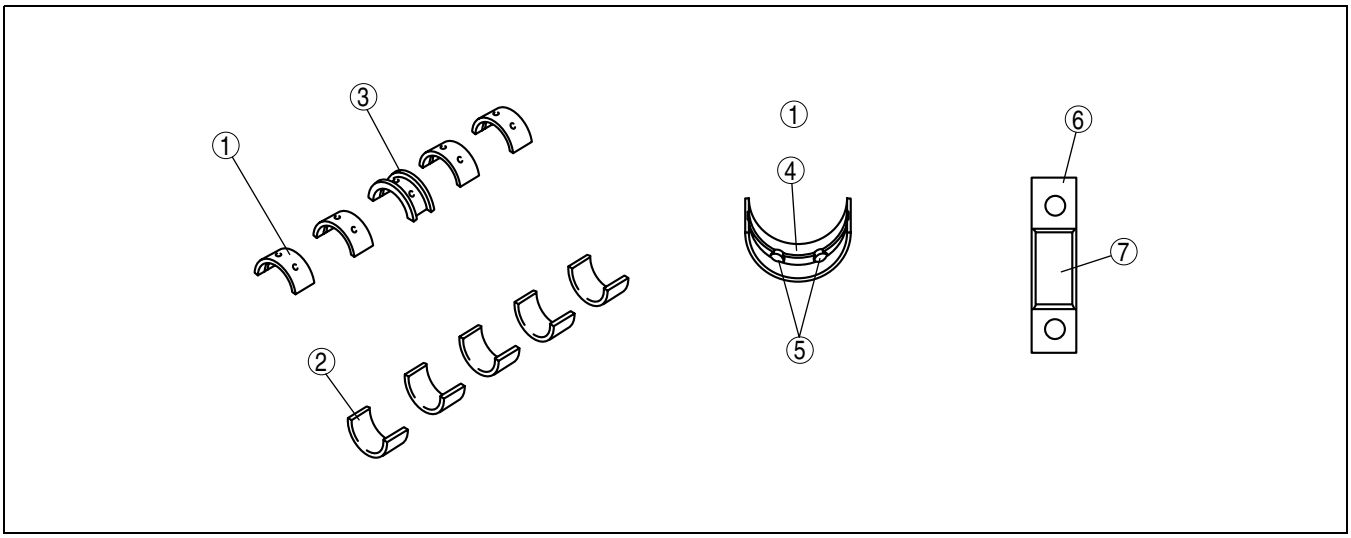

B3E0110T054

1	Upper main bearing
2	Lower main bearing
3	Thrust bearing
4	Upper main bearing oil groove

5	Oil hole
6	Main bearing cap
7	Main bearing

- Three kinds of main bearings are available depending on the oil clearance.

Bearing size	Bearing thickness (mm {in})
Standard	2.506—2.509 {0.0987—0.0988}
0.25 {0.01} OS	2.628—2.634 {0.1035—0.1037}
0.50 {0.02} OS	2.753—2.759 {0.1084—0.1086}

CRANKSHAFT PULLEY CONSTRUCTION [L8, LF]

DPE011011371T01

- A crankshaft position (CKP) signal detecting plate has been adopted for the crankshaft pulley. The torsional damper, which prevents the crankshaft from wobbling, has also been adopted for the crankshaft.
- There is no positioning key slot on the crankshaft pulley. Instead, the positioning hole on the crankshaft pulley and the engine front cover are used for aligning the crankshaft pulley with the crankshaft.
- The crankshaft pulley lock bolt is plastic region tightening bolt to be tightened in two steps to insure crankshaft pulley tightening stability.

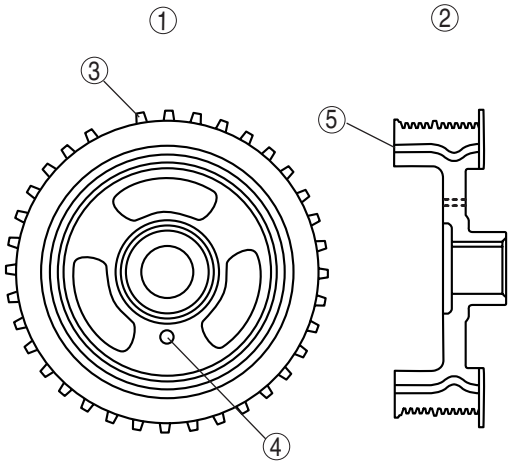

B3E0110T101

1	Front view
2	Cross-sectional view
3	Plate for CKP sensor signal detection

4	Hole for pulley positioning
5	Torsional damper

ENGINE FRONT COVER CONSTRUCTION [L8, LF]

DPE011010501T01

- The engine front cover is made of aluminum alloy, and is integrated with the No.3 engine-mounting bracket, to improve noise absorption and weight reduction.
- The bolt hole for crankshaft pulley positioning, the service hole for unlocking the chain adjuster ratchet, and the service hole for securing the tensioner arm when loosening the timing chain, are on the engine front cover.

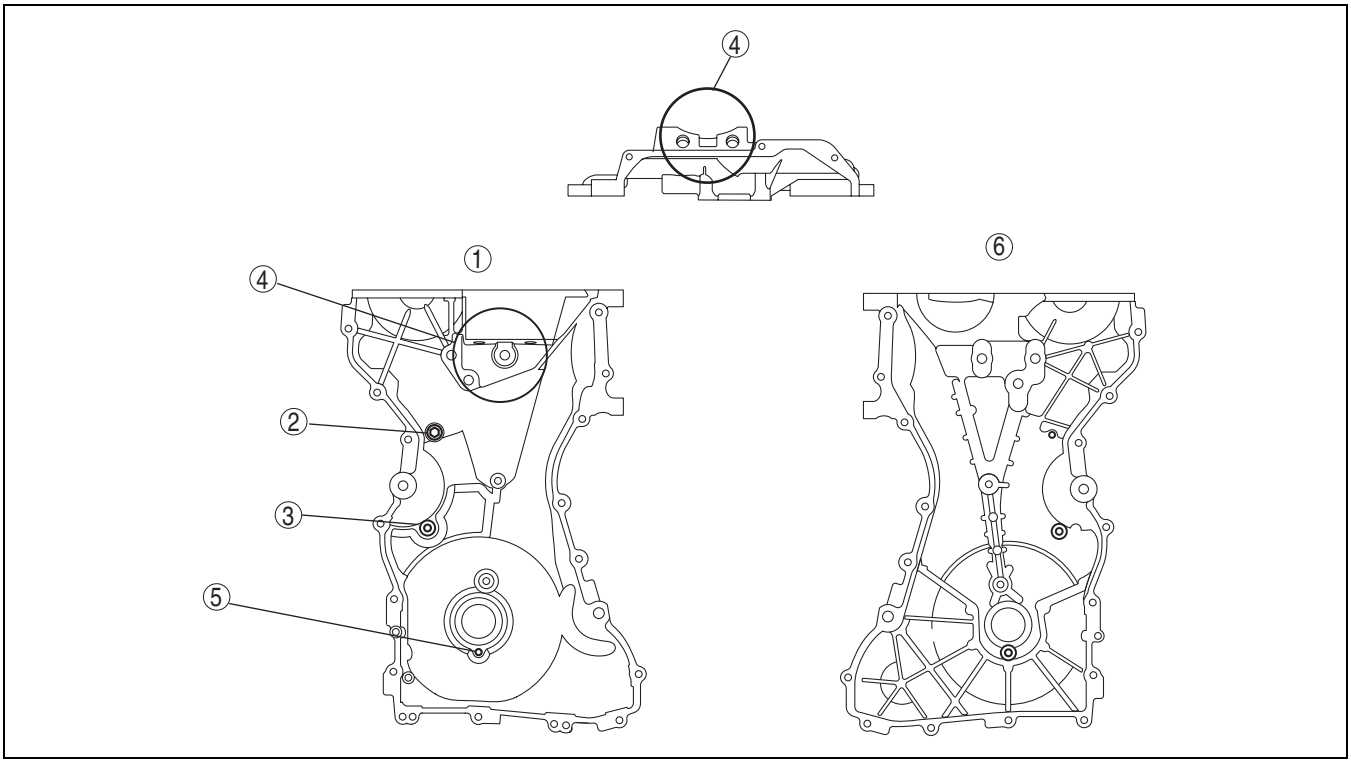

B3E0110T102

1	Front view
2	Service hole for tensioner arm fixation
3	Service hole for chain tensioner lock release

4	No.3 engine mount bracket
5	Bolt hole crankshaft pulley positioning
6	Back view

PISTON, PISTON RING, PISTON PIN CONSTRUCTION [L8, LF]

DPE011011010T01

- The pistons are made of aluminium alloy, which withstands heat and is highly conductive.
- The piston skirt is coated with graphite to reduce friction.
- The offset pistons are used to reduce piston-slapping noise.
- To prevent the piston from being reassembled in the wrong direction, a front mark (←) is on the piston.
- Pistons and connecting rods cannot be disassembled because they are shrinkage fit.

Piston Specification.

ITEM		L8	LF
Outer diameter	mm {in}	82.965—82.995 {3.266—3.268}	87.465—87.495 {3.4435—3.4446}
Offset quantity	mm {in}	0.8 {0.04}	
Compression height: HC	mm {in}	28.5 {1.122}	
Piston height: HD	mm {in}	51.0 {2.0078}	

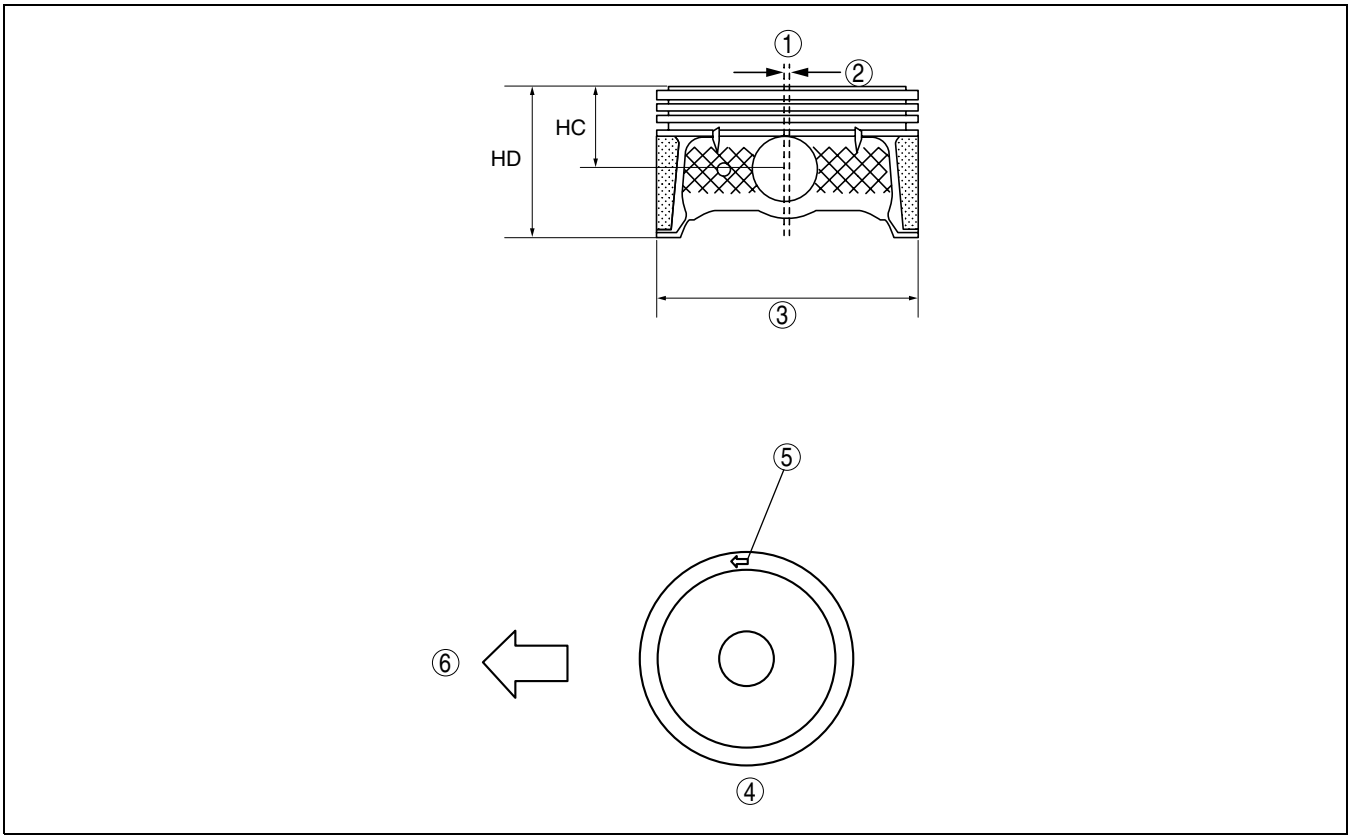

B3E0110T055

1	Piston side view
2	Offset
3	Outer diameter

4	Piston upper view
5	Install arrow facing engine front
6	Engine front side

- The following piston rings have been adopted: Barrel face ring for top ring, taper under cut ring for second ring, 2 scuff rings and an expander for the oil ring.
- The piston pin is made of chrome steel alloy, which has superior rigidity.
- The connecting rod and the piston pin are shrinkage fit, so that it cannot be disassembled.

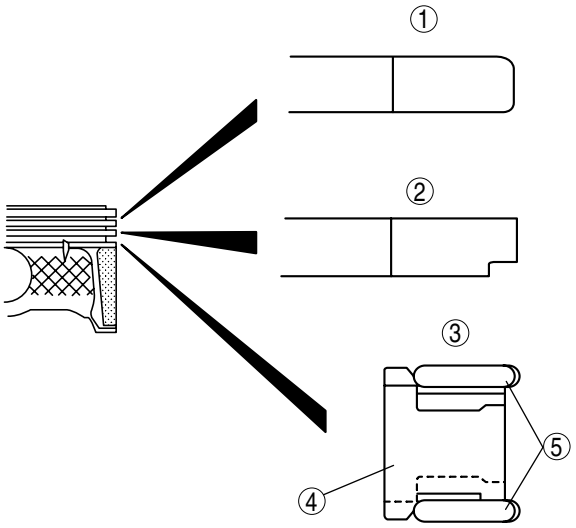

B3E0110T056

1	Top ring sectional view
2	Second ring sectional view
3	Oil ring sectional view

4	Expander
5	Side rail

CONNECTING ROD, CONNECTING ROD BEARING CONSTRUCTION [L8, LF]

DPE011011211T01

- The connecting rod is made of structural sintered alloy to improve rigidity.
- The connecting rod, the piston, and the piston pin are shrinkage fit, so that they cannot be disassembled.
- The connecting rod bolts are plastic region tightening bolts to be tightened in two steps to insure tightening stability.
- There is no positioning tab for the connecting rod bearing. When installing the bearing, measure the position of the bearing so that the position reaches the center of the connecting rod and the bearing cap, and install it.
- The large end of the connecting rod and the connecting rod cap were originally formed as a single unit and then it was cut into the connecting rod and the cap. The form of the cutting surface is used as the alignment mark for the connecting rod and cap.

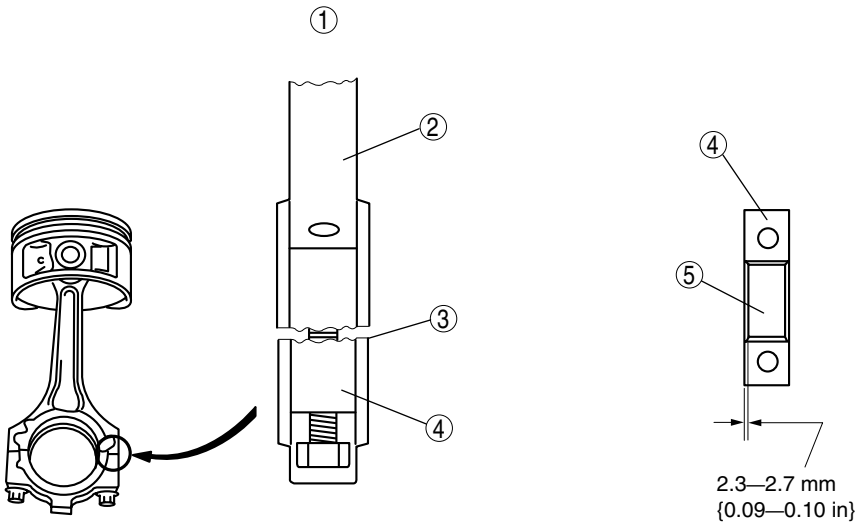

B3E0110T057

1	Enlargement
2	Connecting rod
3	Fracture side

4	Connecting rod cap
5	Connecting rod bearing

- The upper and lower bearing of the connecting rod bearing is made of aluminum alloy.
- There are three kinds of connecting rod bearings depending on the oil clearance.

Bearing size	Bearing thickness (mm {in})
Standard	1.498—1.504 {0.0590—0.0592}
0.50 {0.02} OS	1.748—1.754 {0.0688—0.0690}
0.25 {0.01} OS	1.623—1.629 {0.0639—0.0641}

DRIVE BELT CONSTRUCTION [L8, LF]

DPE011015800T01

- A generator drive belt auto tensioner with an embedded coil spring has been adopted to automatically maintain optimal drive belt tension.
- With the adoption of stretch-type A/C drive belt, specified tension of the belt is maintained. When replacing the A/C drive belt, remove it by cutting it off, and install a new one using the specified jig.

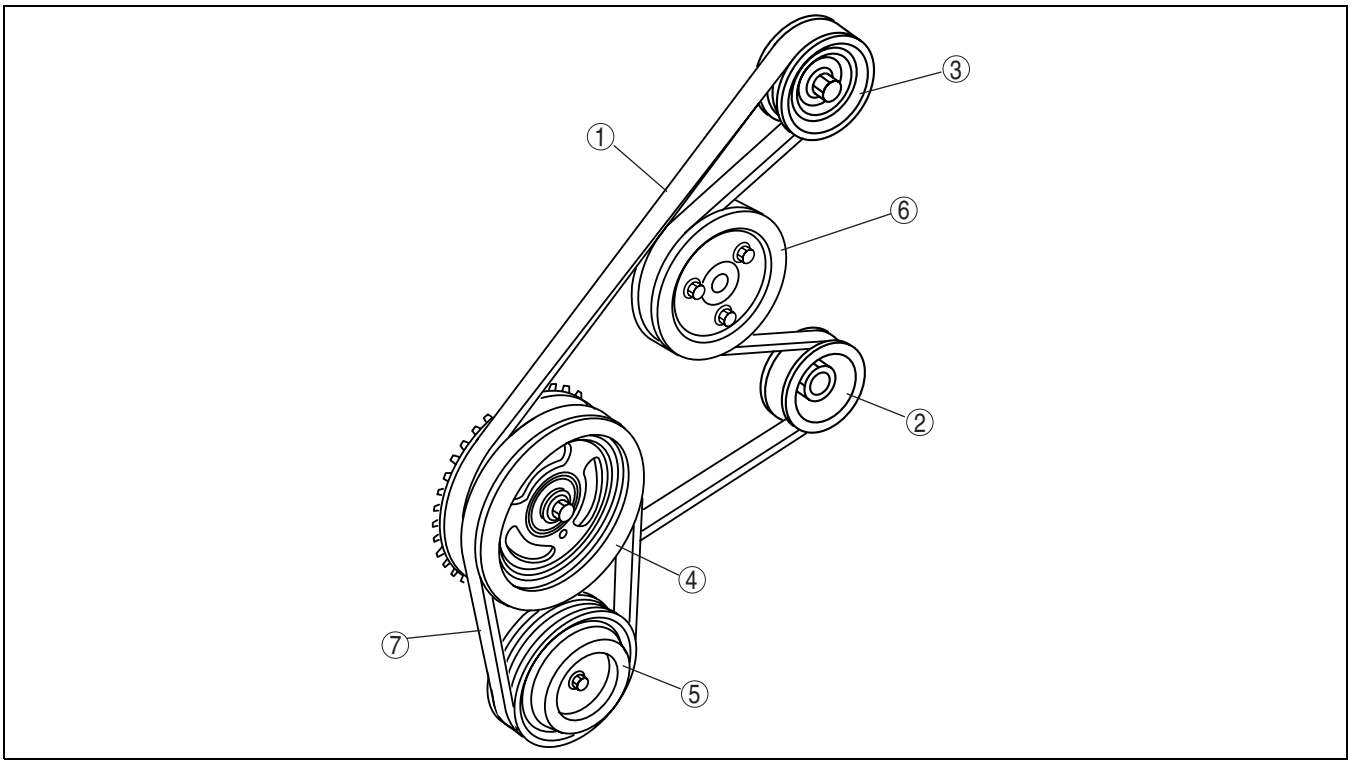

B3E0110T104

1	Generator drive belt
2	Generator pulley
3	Drive belt auto tensioner pulley
4	Crankshaft pulley

5	A/C compressor pulley
6	Water pump pulley
7	A/C drive belt

ENGINE MOUNT OUTLINE [L8, LF]

DPE011039000T01

- The pendulum-type layout of the engine mounting reduces noise in the cabin.
- The engine is supported at three points and simplification of engine mount composition has been attained.
- An oil-filled No.3 engine mount rubber has been adopted to reduce noise and vibration in the cabin.
- The surface of the No.3 engine mount is made of aluminium alloy to decrease weight.

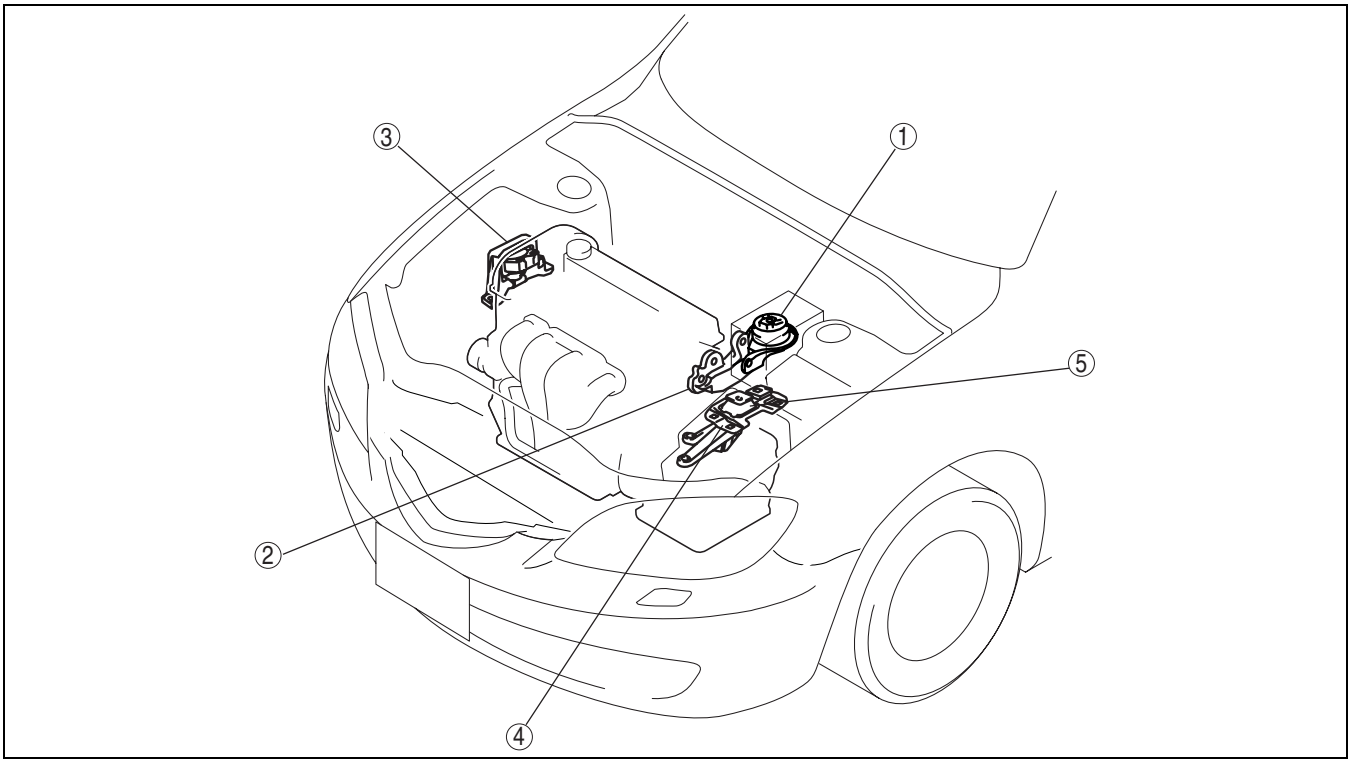

B3E0110T061

1	No.1 engine mount rubber
2	No.1 engine mount bracket
3	No.3 engine mount rubber

4	No.4 engine mount bracket
5	No.4 engine mount rubber

ENGINE MOUNT CONSTRUCTION [L8, LF]

DPE011039000T02

- The No.1 engine mounting rubber regulates backlash from the powertrain.
- The No.3 engine mounting rubber is oil-filled for noise reduction and vibration isolation.
- The installation structure of the No.4 engine mount has been simplified for serviceability improvement.

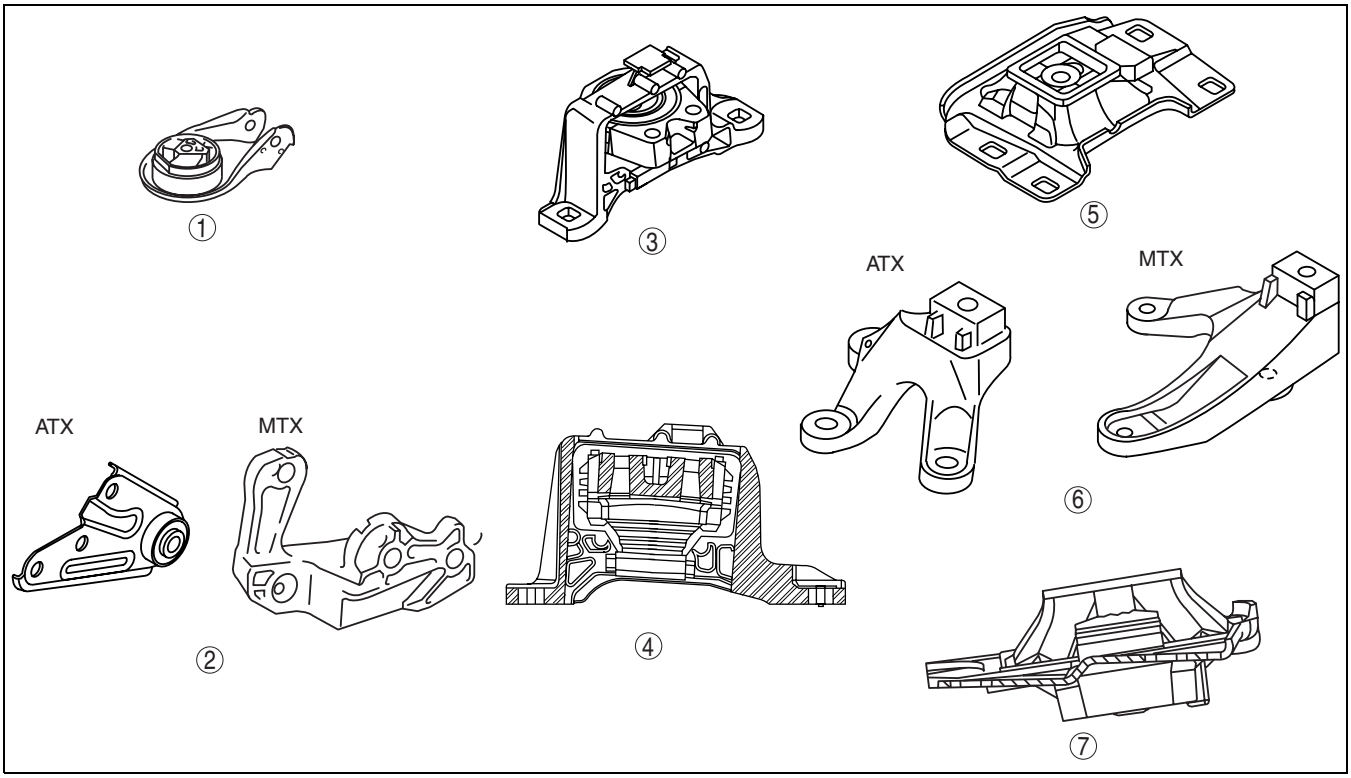

DPE110AN1001

1	No.1 engine mount rubber
2	No.1 engine mount bracket
3	No.3 engine mount rubber
4	No.3 engine mount rubber sectional view

5	No.4 engine mount rubber
6	No.4 engine mount bracket
7	No.4 engine mount rubber sectional view

- The engine is supported at the following three points: front part of the engine (No.3 engine mounting), one side of the transaxle (No.1 engine mounting), and rear upper part of the transaxle (No.4 engine mounting). The supporting point at the side of the transaxle (No.1 engine mounting) has been set at the lowest edge of the transaxle. With this layout, No.1 engine mounting absorbs the rotation force, generated under the engine torque fluctuation and transmitted to the powertrain, and distributes the rotation force to the front and rear part of the engine (pendulum).

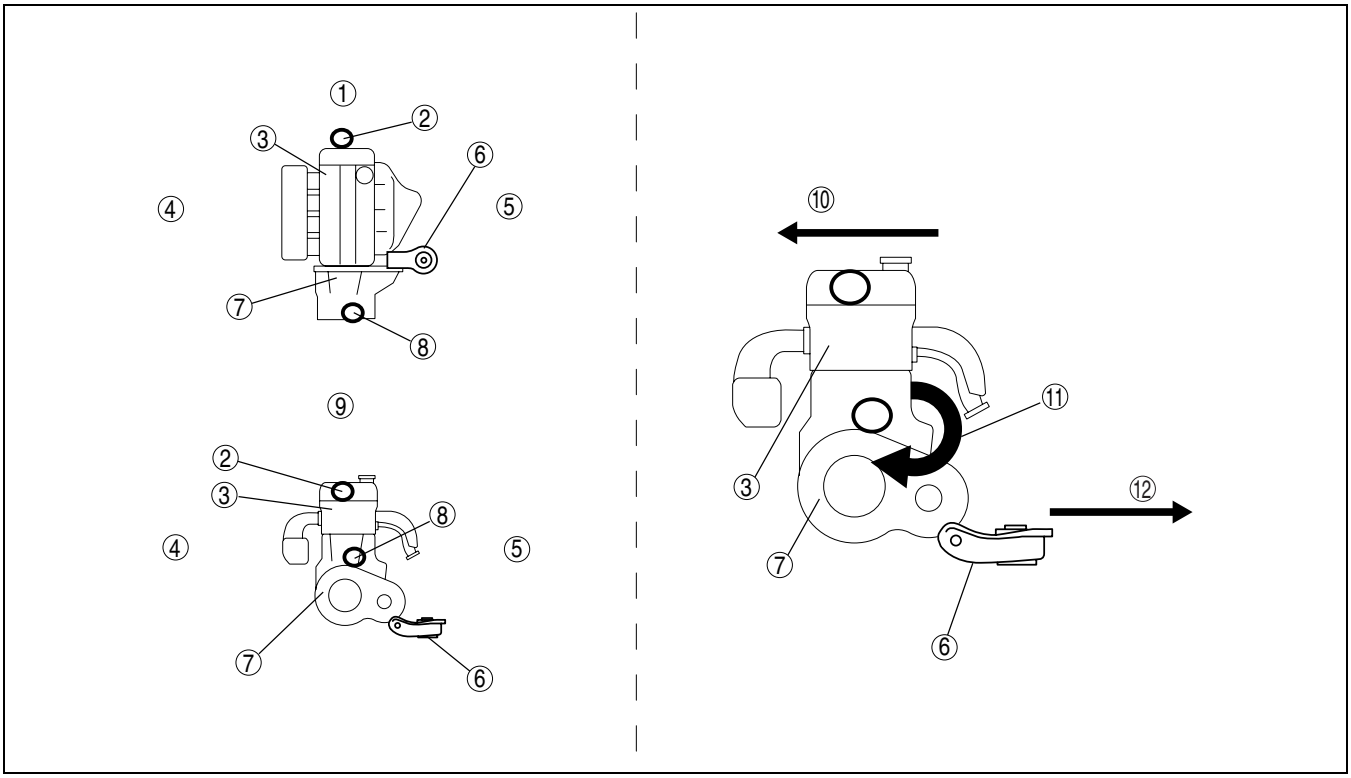

B3E0110T112

1	Powertrain system upper surface
2	No.3 engine mount
3	Engine
4	Vehicle front
5	Vehicle rear
6	No.1 engine mount

7	Transaxle
8	No.4 engine mount
9	Powertrain system back
10	Engine front
11	Torque
12	Engine back

VALVE MECHANISM OUTLINE [L8, LF]

DPE011012111T01

- There are two intake ports and two exhaust ports for each cylinder. There are a total of sixteen valves directly driven by two camshafts.

VALVE MECHANISM STRUCTURAL VIEW [L8, LF]

DPE011012111T02

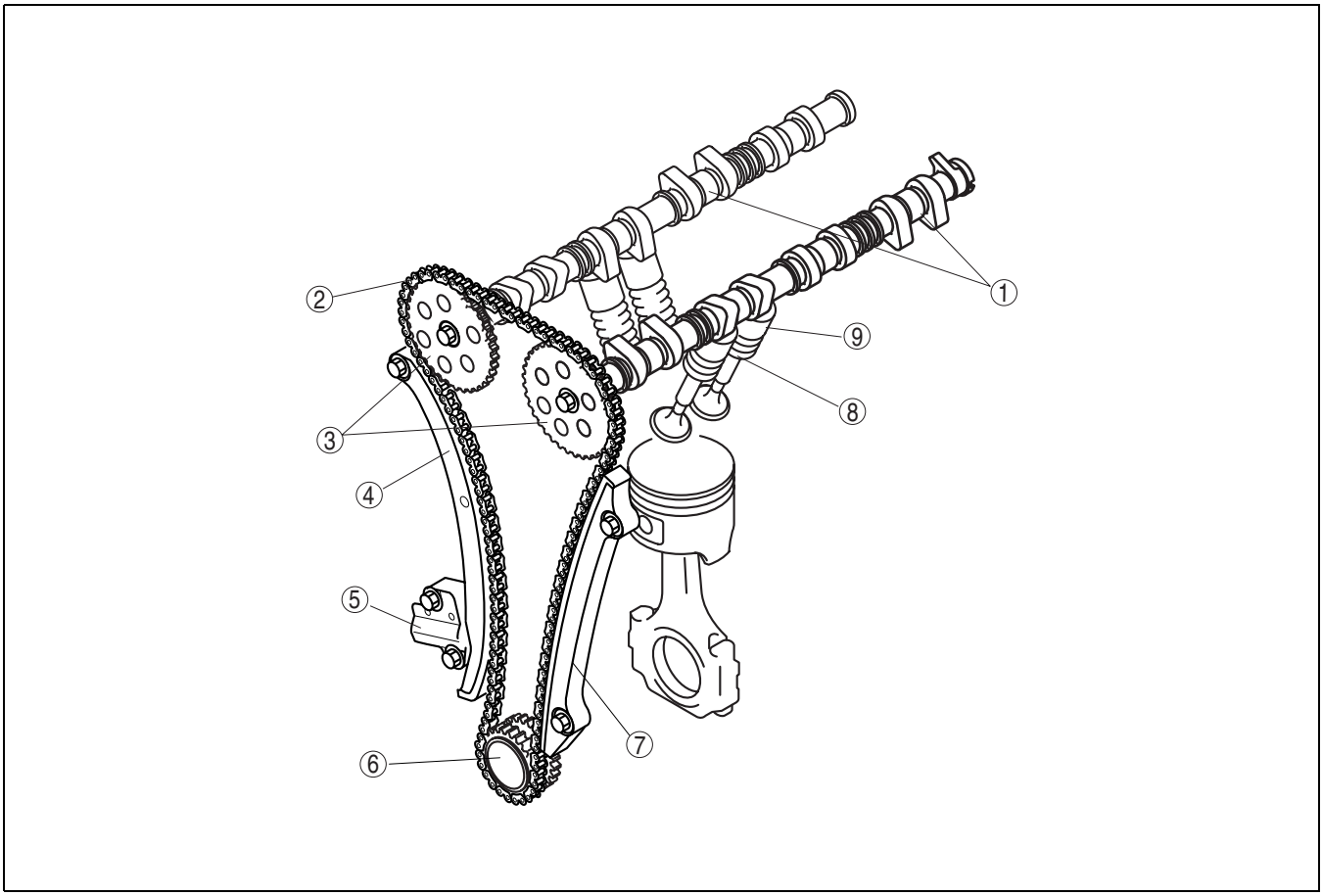

B3E0110T108

1	Camshaft
2	Timing chain
3	Camshaft sprocket
4	Tensioner arm
5	Chain tensioner

6	Crankshaft sprocket
7	Chain guide
8	Valve assembly
9	Tappet

VALVE, VALVE SPRING, VALVE SEAL, VALVE GUIDE CONSTRUCTION [L8, LF]

DPE011012111T03

- The valves are made of heat-resistant steel. There are two intake valves and two exhaust valves per cylinder.

VALVE SPEC.

ITEM		L8	LF
valve full length	(mm {in})	Intake valve: Approx. 103.4 {4.070} Exhaust valve: Approx. 104.7 {4.120}	
Intake valve umbrella diameter	(mm {in})	Intake valve: Approx. 32.5 {1.28} Exhaust valve:Approx. 28 {1.10}	Intake valve: Approx. 35 {1.38} Exhaust valve:Approx. 30 {1.18}
Stem diameter	(mm {in})	Intake valve: Approx. 5.5 {0.22} Exhaust valve: Approx. 5.5 {0.22}	

- The intake valve and the exhaust valve are tufftride processed to improve adhesion resistance.
- The valve spring is an beehive type. It has been improved by reducing the size of the upper seat.
- The valve guide is made of sintered alloy to improve abrasion resistance.
- The valve seal is integrated with the lower spring seat to simplify the unit and improve serviceability.

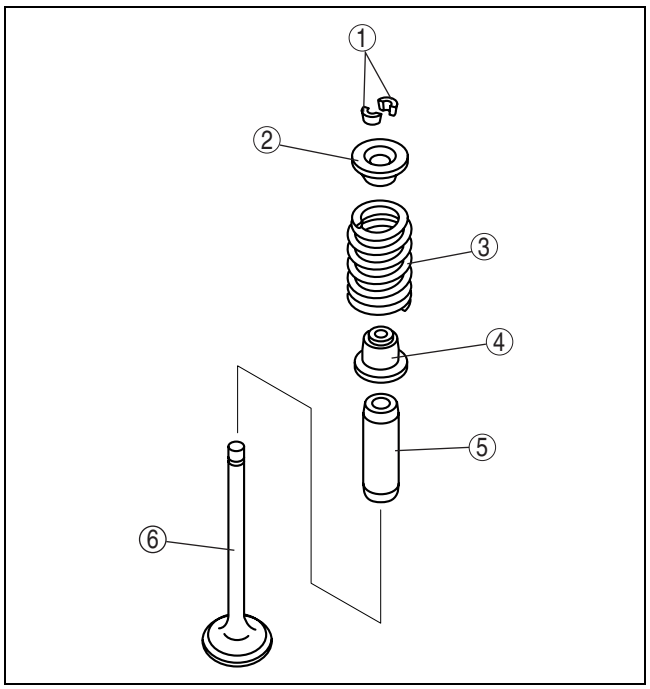

AME2211N008

1	Valve keeper
2	Upper valve spring seat
3	Valve spring
4	Valve seal
5	Valve guide
6	Valve

CAMSHAFT CONSTRUCTION [L8, LF]

DPE011012420T01

- A cast iron, highly rigid five axis journal camshaft has been adopted to insure higher reliability.
- Camshaft endplay is regulated at the flange of the No.1 journal.
- Lubricating oil is supplied through the oil supply hole at each journal. Additionally the cam nose part is chill cast to improve abrasion resistance, and the width of the cam heel part is shortened to reduce weight
- There is no positioning pin or key slot for the camshaft sprocket at the end of the camshaft.

Camshaft Specification

ITEM	L8	LF
LIFT (mm {in})	IN : 7.5 {0.29} EX : 7.7 {0.30}	IN : 8.8 {0.34} EX : 7.7 {0.30}
Overlap (°)	8	

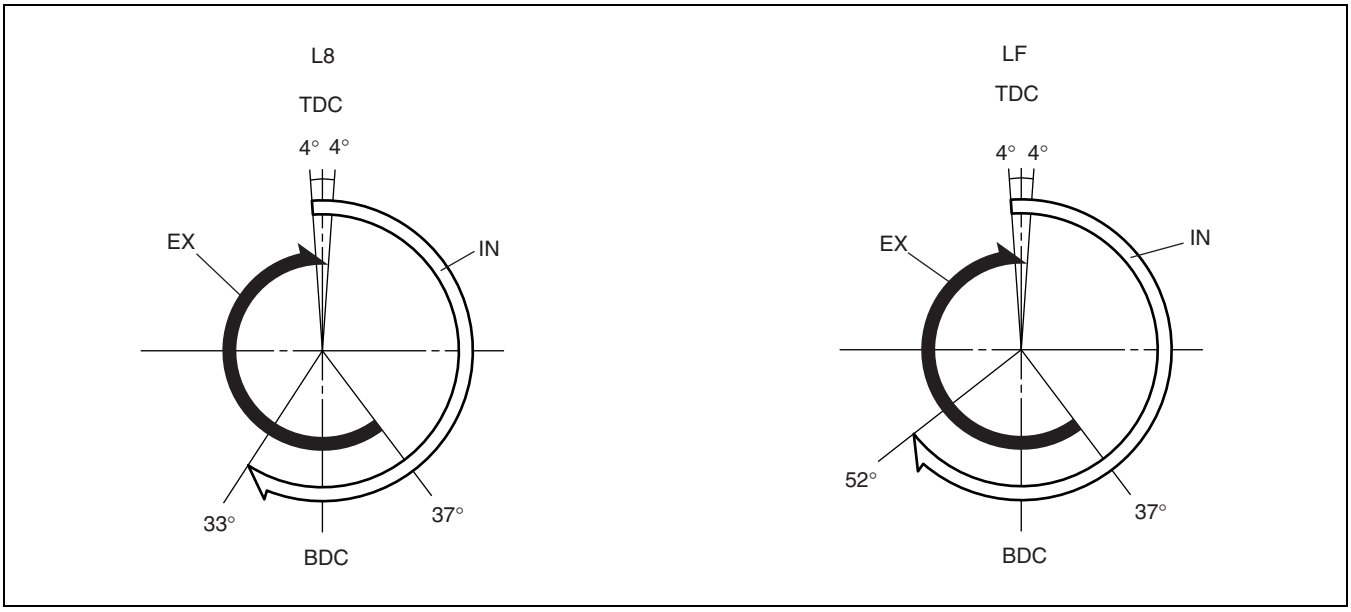

DPE110AT1010

- The detection unit or the camshaft position (CMP) sensor, which is integrated with the camshaft, is on the intake camshaft.
- The groove for securing the No.1 cylinder TDC for the camshaft, is provided at the rear of the intake and exhaust camshaft.

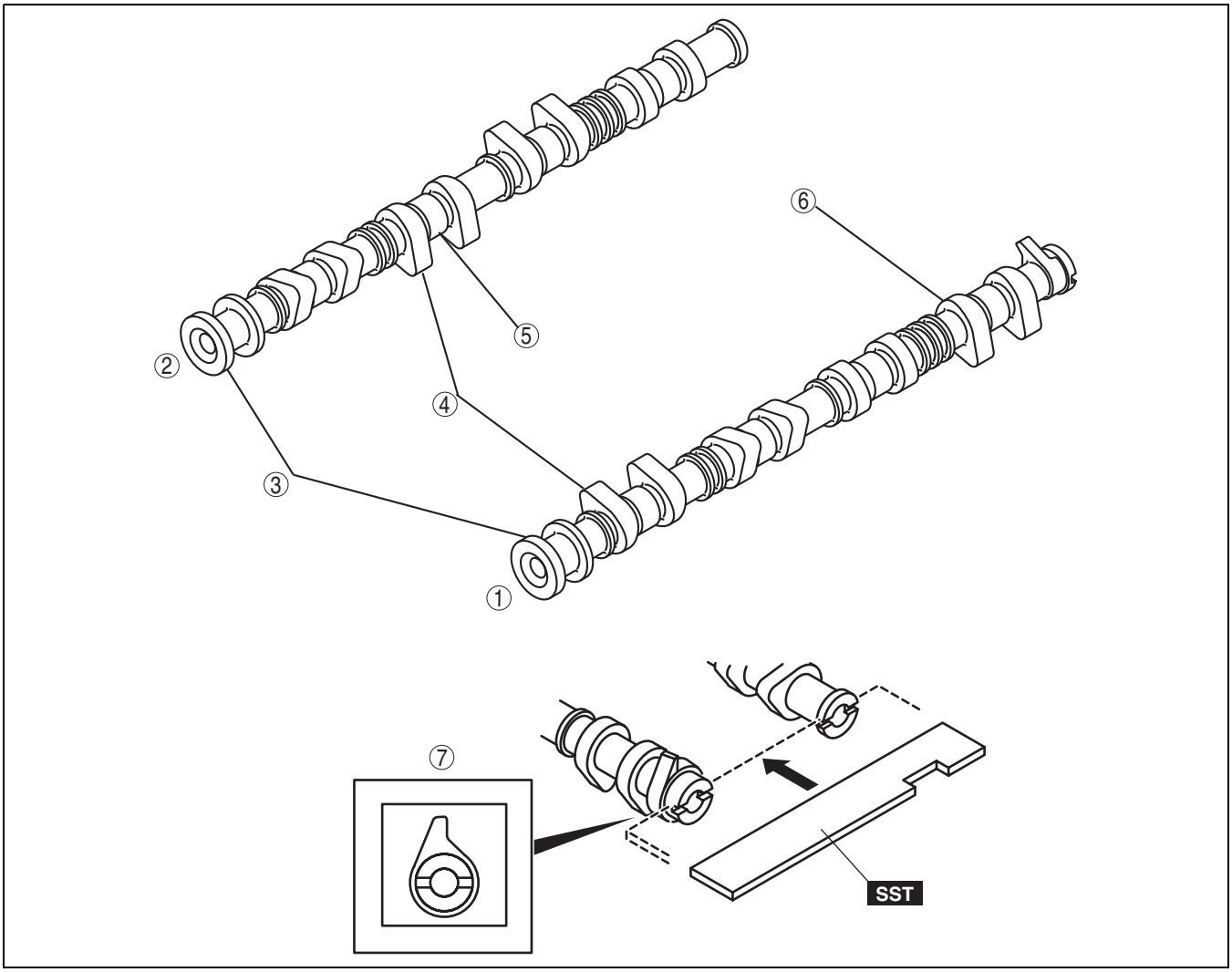

B3E0110T109

1	Intake camshaft
2	Exhaust camshaft
3	Thrust
4	Cam nose
5	Cam journal
6	Cam heel
7	Detection part for CKP sensor

CAMSHAFT SPROCKET CONSTRUCTION [L8, LF]

DPE011012420T02

- Sintered alloy, which has high rigidity, has been adopted for the camshaft sprocket and is hardened to improve the abrasion resistance at the contact point with the timing chain.

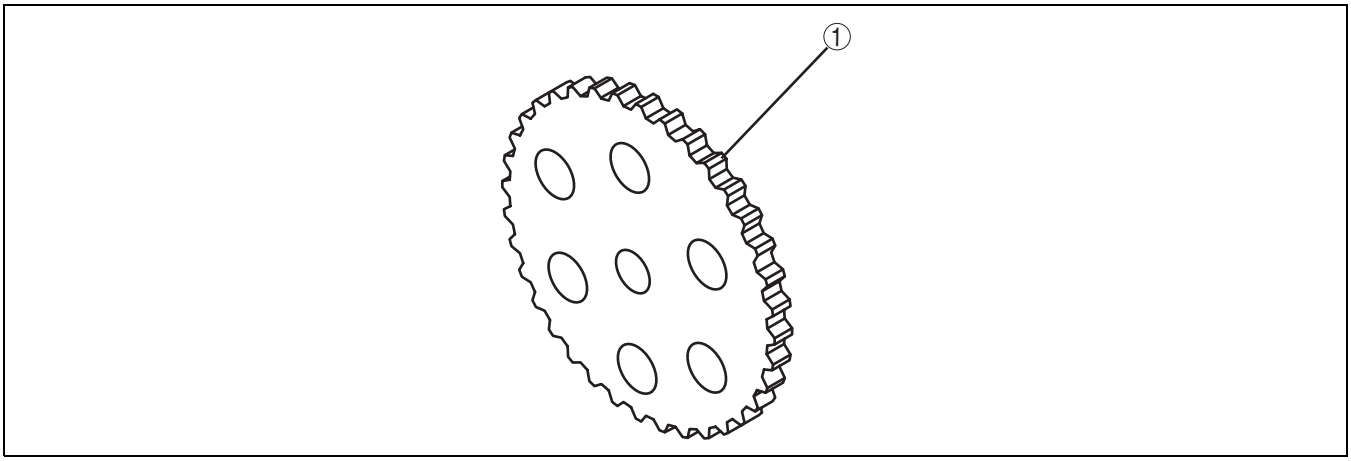

B3E0110T114

1	Camshaft sprocket

CRANKSHAFT SPROCKET CONSTRUCTION [L8, LF]

DPE011012420T03

- High-strength chromium steel has been adopted for the crankshaft sprocket. Due to carbonizing protection, abrasion resistance at all chain contact points is increased.
- The crankshaft sprocket consists of the timing chain sprocket and oil pump sprocket, which are integrated into a single unit.
- The keyway on the crankshaft sprocket, used to position the crankshaft during installation, has been eliminated.

Timing chain Drive Sprocket Specification

Outer diameter	(mm {in})	Approx. 47.955 {1.8880}
Tooth width	(mm {in})	Approx. 7.35 {0.289}

Oil Pump Drive Sprocket Specification

Outer diameter	(mm {in})	Approx. 47.955 {1.8880}
Tooth width	(mm {in})	Approx. 6.15 {0.242}

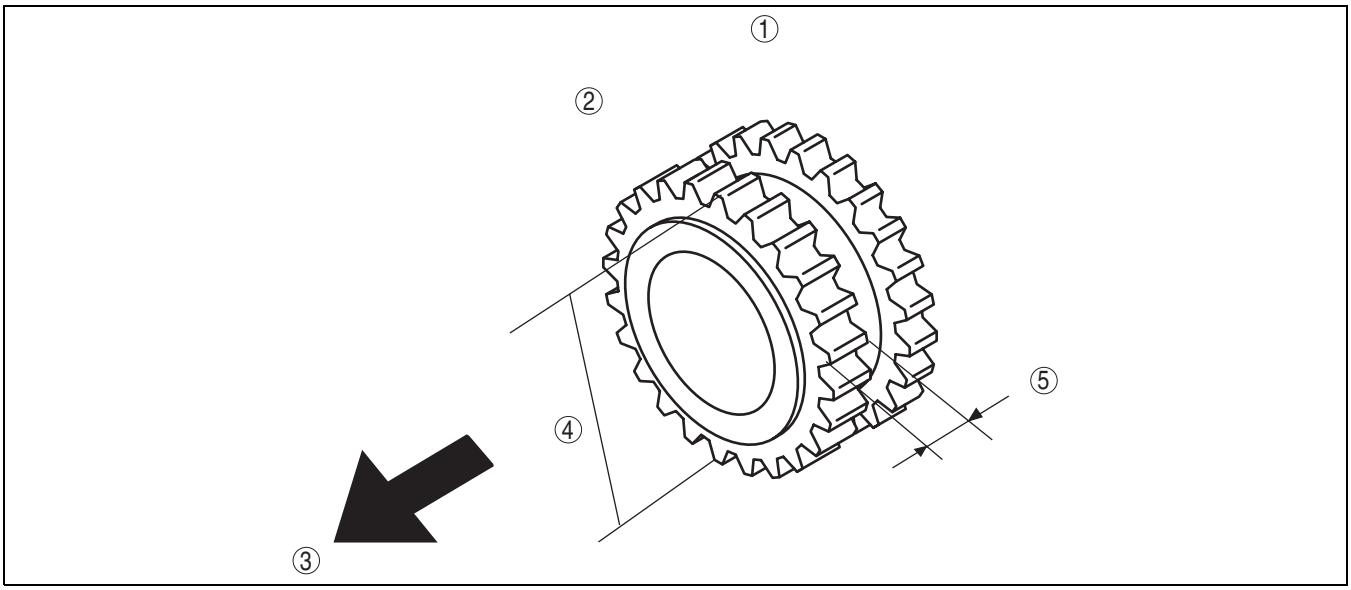

AME2211N010

1	Oil pump drive sprocket
2	Timing chain drive sprocket
3	Engine front

4	Outer diameter
5	Tooth width

TIMING CHAIN, CHAIN TENSIONER CONSTRUCTION [L8, LF]

DPE011012201T01

- A silent chain (link grounding type) type has been adopted for the timing chain to reduce tapping noise caused by sprocket engagement.
- Engine oil inside the engine front cover lubricates the timing chain and each sprocket. The pin part of the timing chain is nitriding processed to improve abrasion resistance.

Timing Chain Specification

Pitch size (mm {in})	8 {0.32}

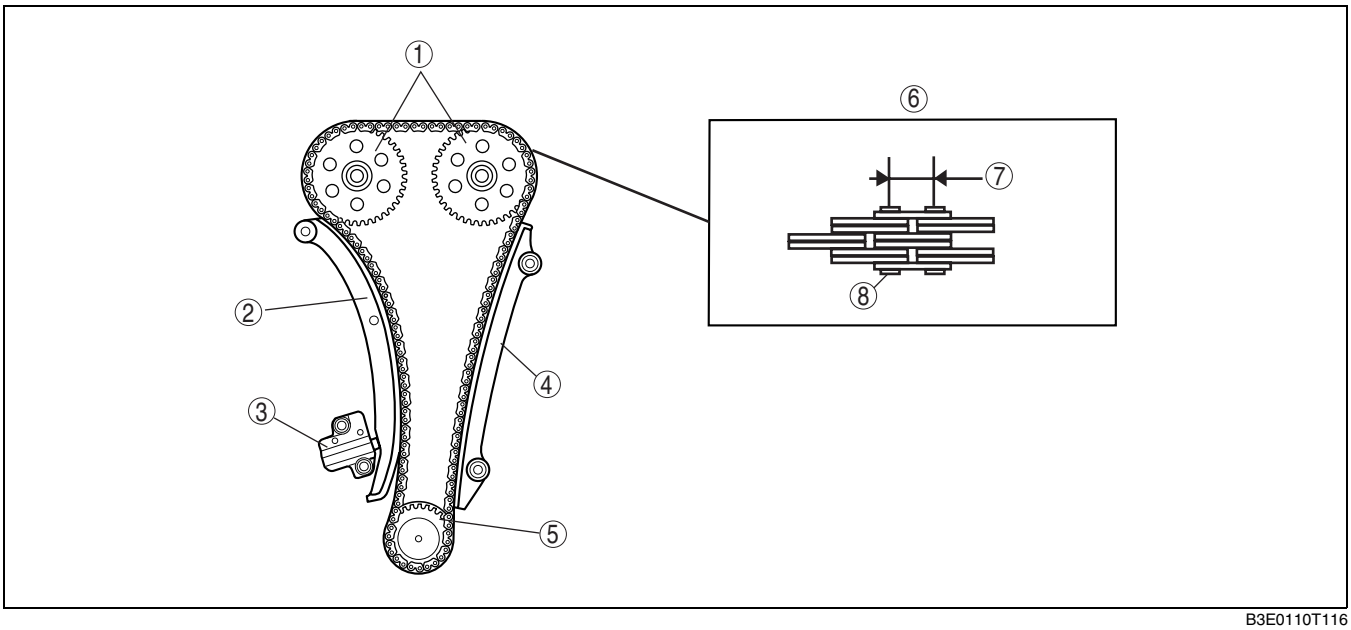

B3E0110T116

1	Camshaft sprocket
2	Tensioner arm
3	Chain tensioner
4	Chain guide

5	Crankshaft sprocket
6	Timing chain
7	Pitch size
8	Pin

- An oil pressure type chain tensioner has been adopted for the timing chain tensioner. The tension of the timing chain is constantly maintained using oil pressure and spring force in the chain tensioner.
- The oil pressure type chain tensioner consists of the following parts: Piston spring that depresses the tensioner arm, and a check ball that maintains pressure to the tensioner arm.

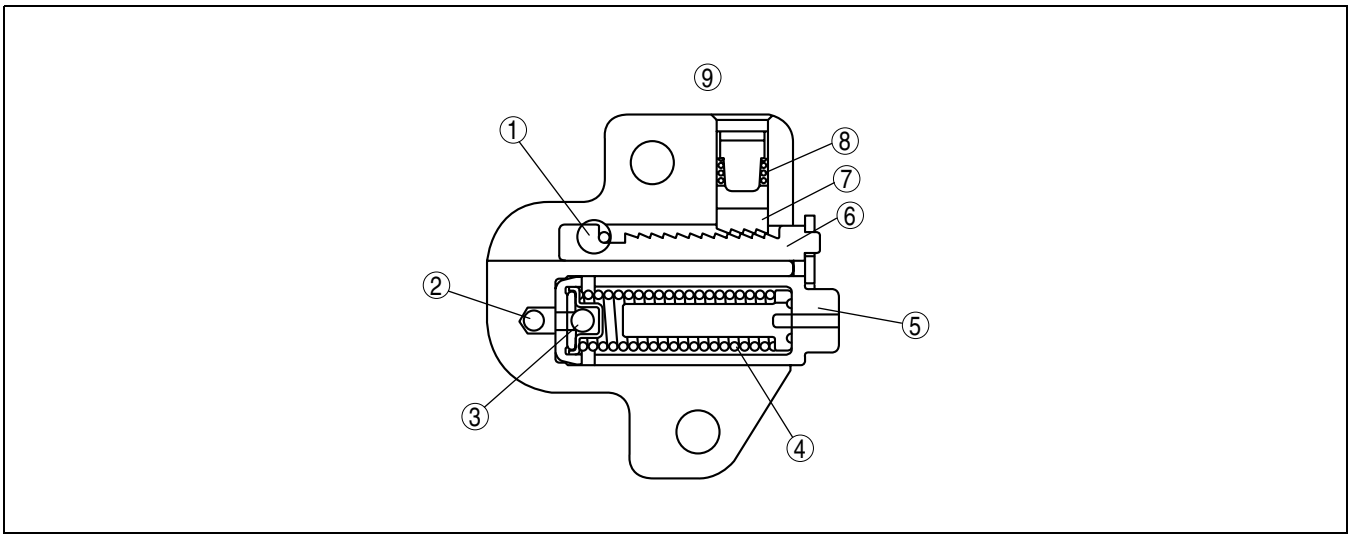

B3E0110T058

1	Hole for a ratchet lock
2	Oil supply hole
3	Check ball

4	Piston spring
5	Piston
6	Rack

7	Ratchet
8	Ratchet spring
9	Cross-section

TAPPET CONSTRUCTION [L8, LF]

DPE011012431T01

- The tappet is a shimless tappet which is integrated with the shim.
- The tappet surface is phosphate-coated to smooth the attaching surface to the cam and improve abrasion resistance.
- The valve clearance can be adjusted by replacing the tappet. There are 35 kinds of tappets depending on the thickness. The tappet kind can be determined by the engraved identification mark.

Tappet Specification

Discernment mark	Tappet thickness (mm {in})	The number of jumps (mm {in})
725—625	3.725—3.625 {0.1467—0.1427}	0.025 {0.00098}
602—122	3.602—3.122 {0.1418—0.1229}	0.02 {0.00078}
100—000	3.100—3.000 {0.1220—0.1181}	0.025 {0.00098}

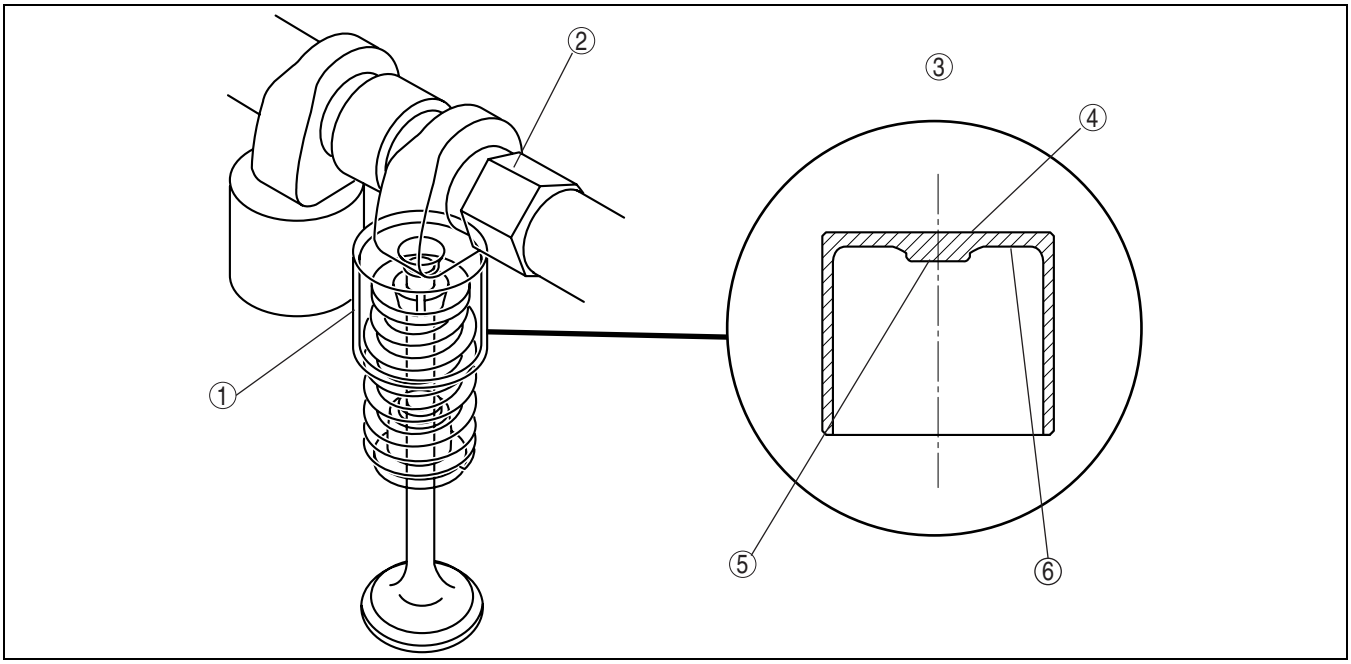

AME2211N007

1	Tappet
2	Camshaft
3	Tappet sectional view

4	Cam lob contact surface
5	Valve stem contact surface
6	Identification mark position

01–11A LUBRICATION [L8, LF]

LUBRICATION SYSTEM OUTLINE [L8, LF] 01–11A–1
LUBRICATION SYSTEM STRUCTURAL VIEW [L8, LF] 01–11A–1
LUBRICATION SYSTEM FLOW DIAGRAM [L8, LF] 01–11A–2
OIL FILTER CONSTRUCTION [L8, LF] . 01–11A–2
OIL COOLER CONSTRUCTION [L8, LF] 01–11A–3
OIL PAN CONSTRUCTION [L8, LF] 01–11A–3
OIL STRAINER CONSTRUCTION [L8, LF] 01–11A–4
OIL PUMP CONSTRUCTION [L8, LF] . . . 01–11A–4
OIL JET VALVE CONSTRUCTION/OPERATION [L8, LF] 01–11A–6

LUBRICATION SYSTEM OUTLINE [L8, LF]

DPE011100000T01

Features

Reduced noise	• Aluminum alloy oil pan adopted
Reduced weight	• Plastic oil strainer adopted
Improved lubricity	• Trochoid gear type oil pump adopted • Oil jet valves adopted • Water-cooled type oil cooler adopted (if equipped)

LUBRICATION SYSTEM STRUCTURAL VIEW [L8, LF]

DPE011100000T02

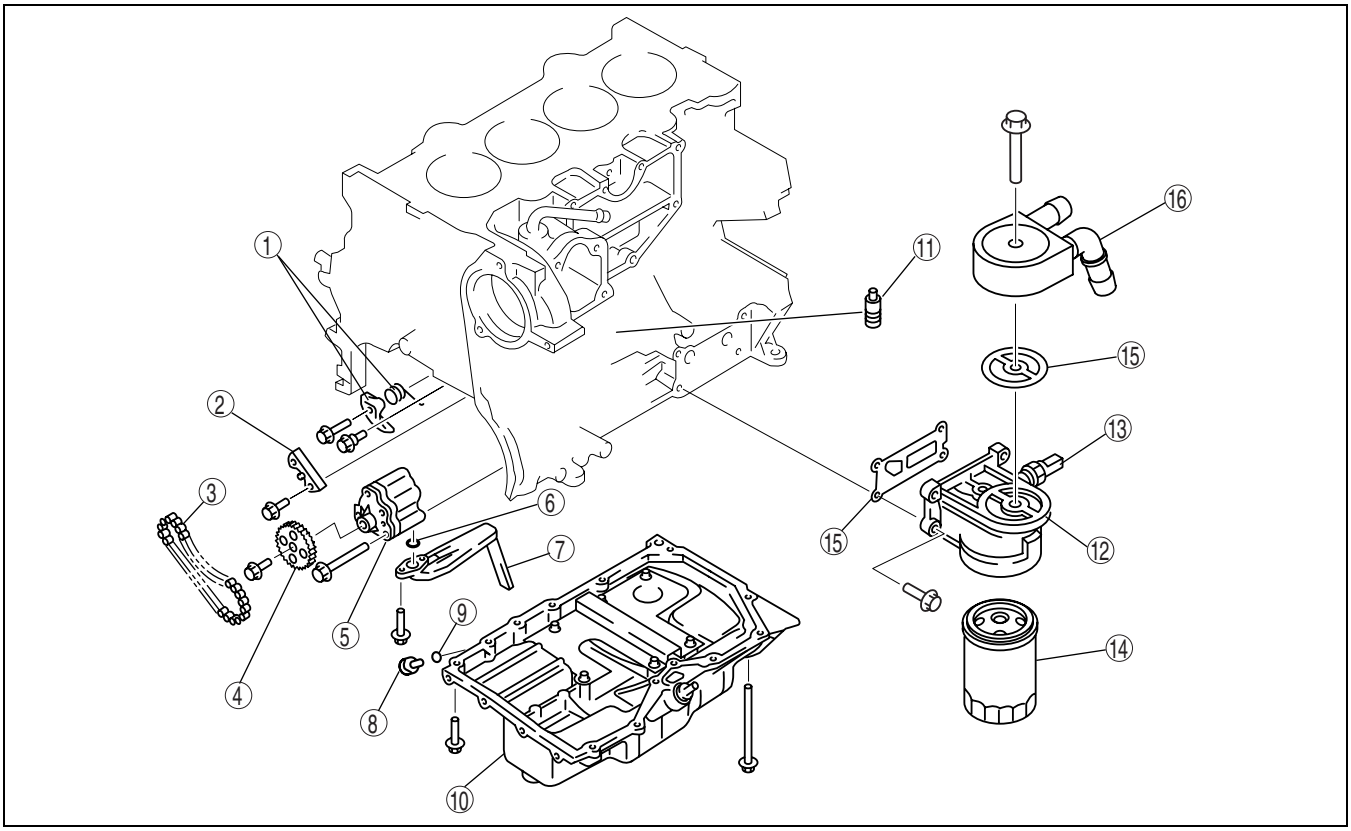

DPE111AT1001

1	Oil pump chain tensioner
2	Oil pump chain guide
3	Oil pump chain
4	Oil pump sprocket
5	Oil pump
6	O-ring
7	Oil strainer
8	Oil pan drain plug

9	Washer
10	Oil pan
11	Oil jet valve
12	Oil filter adapter
13	Oil pressure switch
14	Oil filter
15	Gasket
16	Oil cooler (if equipped)

LUBRICATION SYSTEM FLOW DIAGRAM [L8, LF]

DPE011100000T03

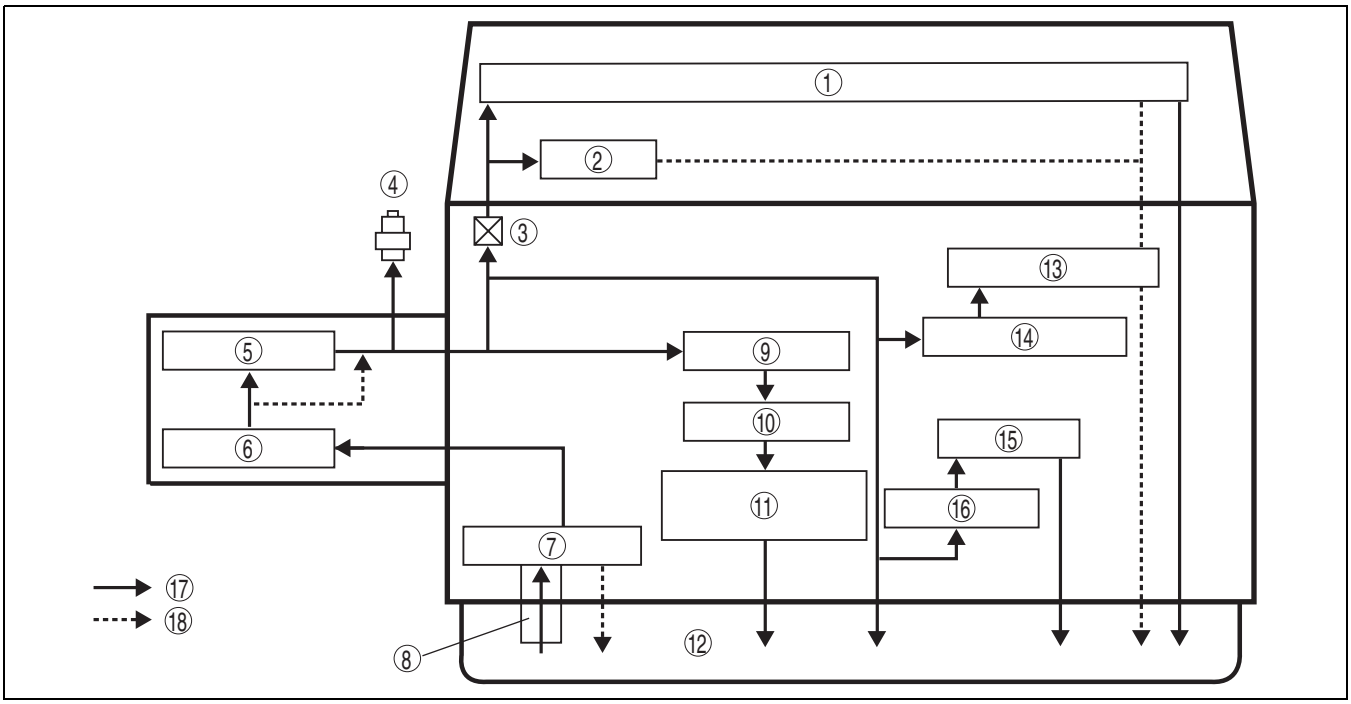

DPE111AT1002

1	Camshaft
2	Tappet
3	Orifice
4	Oil pressure switch
5	Oil filter
6	Oil cooler (if equipped)
7	Oil pump
8	Oil strainer
9	Main bearing

10	Crankshaft
11	Connecting rod bearing
12	Oil pan
13	Timing chain
14	Chain tensioner
15	Piston
16	Oil jet valve
17	Oil passage
18	Relief passage

OIL FILTER CONSTRUCTION [L8, LF]

DPE011114300T01

- The oil filter component is installed on the left surface (vehicle front) of the cylinder block.
- An aluminum oil filter adapter has been adopted for weight reduction. The oil pressure switch and oil cooler are installed on the oil filter adapter.
- The oil filter is a full-flow paper element type with an outer diameter of 76.2 mm {3.00 in} and height of 94.0 mm {3.70 in}.

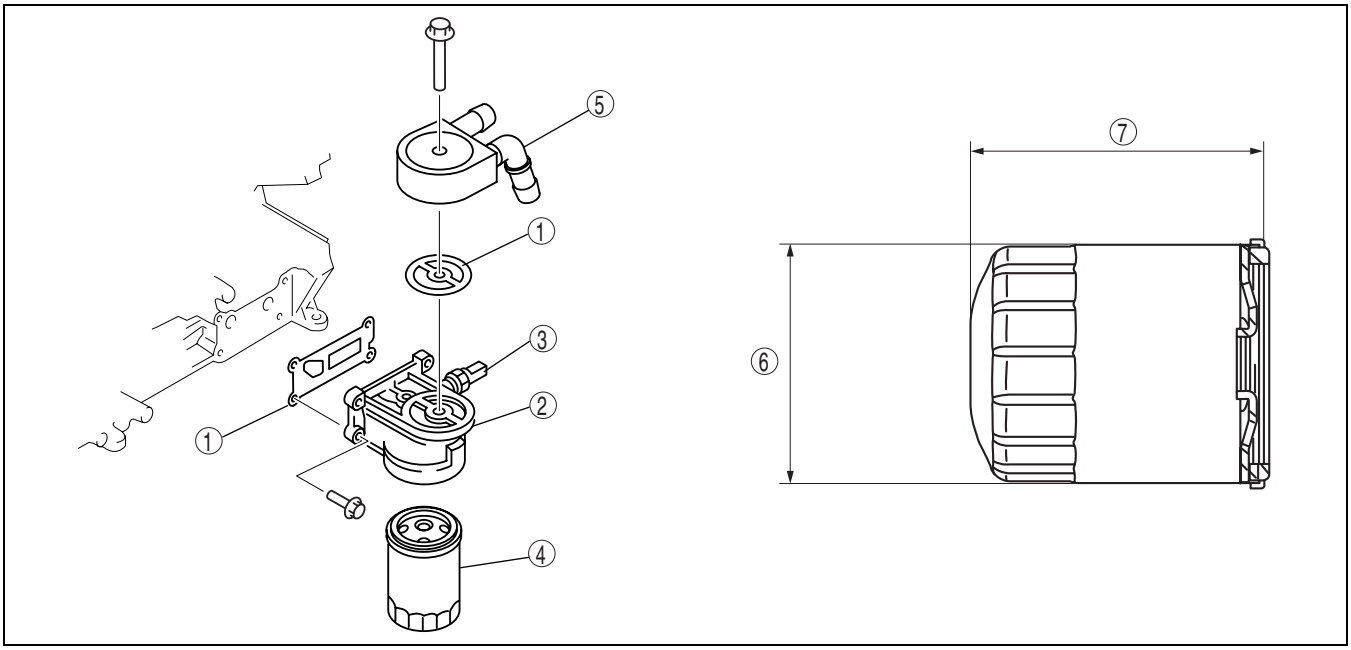

DPE111AT1003

1	Gasket
2	Oil filter adapter
3	Oil pressure switch
4	Oil filter

5	Oil cooler (if equipped)
6	Outer diameter
7	Height

OIL COOLER CONSTRUCTION [L8, LF]

DPE011114700T01

- A water-cooled type oil cooler has been adopted to reduce engine oil degradation.
- The oil cooler is attached to the oil filter adapter.

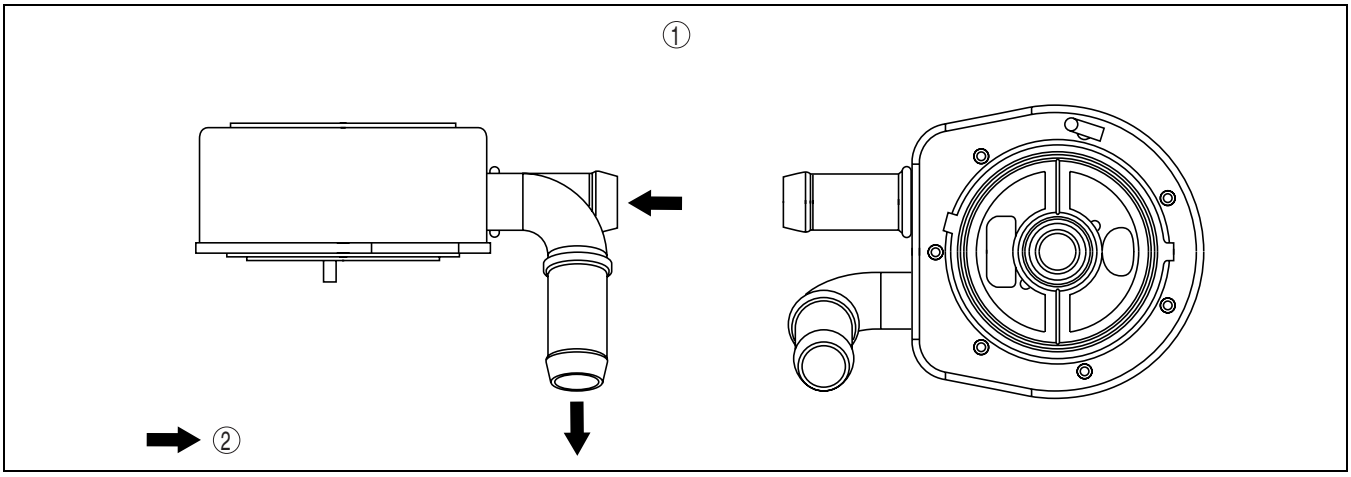

DPE111AT1004

1	External view

2	Engine coolant flow direction

OIL PAN CONSTRUCTION [L8, LF]

DPE011110040T01

- An aluminum alloy oil pan has been adopted for noise reduction.
- An oil pan baffle plate has been adopted inside the oil pan to stabilize engine oil diffusion by crankshaft rotation and oil level when the vehicle rolls.
- A silicon sealant with excellent sealing qualities has been adopted. Also, sealing slots have been adopted on the oil pan attachment side to improve sealing performance.

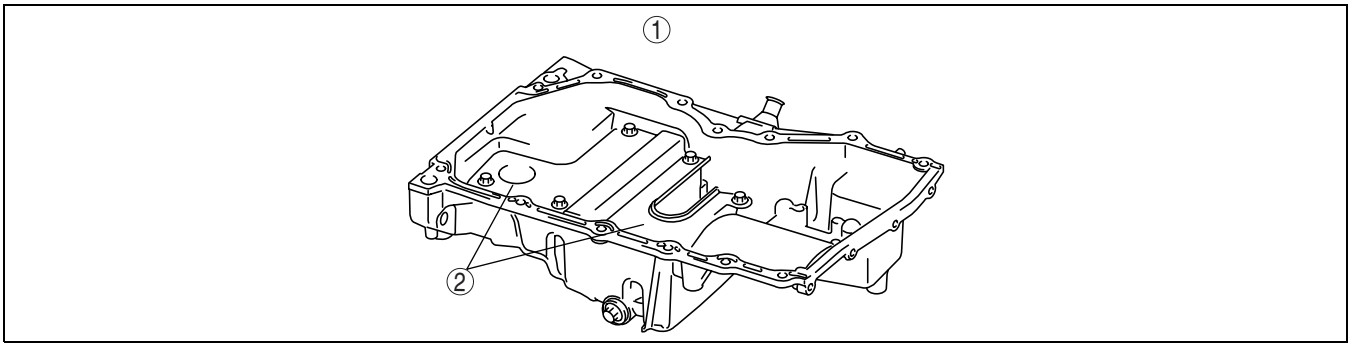

DPE111AT1005

1	External view
2	Oil pan baffle plate

OIL STRAINER CONSTRUCTION [L8, LF]

DPE011114240T01

- A plastic oil strainer with a resin filter in the middle of the strainer has been adopted for weight reduction.

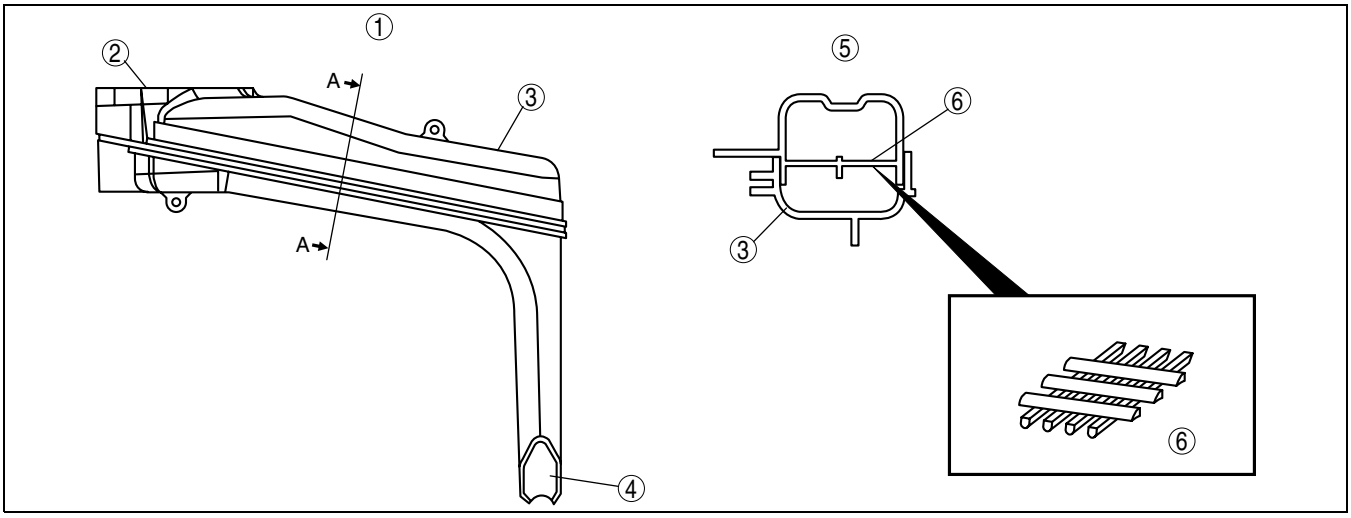

B3E0111T018

1	External view	4	Oil inlet
2	Oil pump attachment side	5	Sec. A-A
3	Oil strainer	6	Resin filter

OIL PUMP CONSTRUCTION [L8, LF]

DPE011114100T01

- The oil pump is installed inside the engine front cover. The crankshaft drives the inner rotor through the oil pump chain and oil pump sprocket.
- The oil pump component consists of the oil pump body, oil pump sprocket, oil pump chain, oil pump chain guide, and oil pump chain tensioner.
- An efficient and compact five-lobe epitrochoid and six-flank inner envelope type gear has been adopted on the oil pump.
- The oil pump consists of the inner and outer rotors, relief valve, and oil pump body.

- The oil pump cannot be disassembled. If there is an oil pump malfunction, replace it as a single unit.

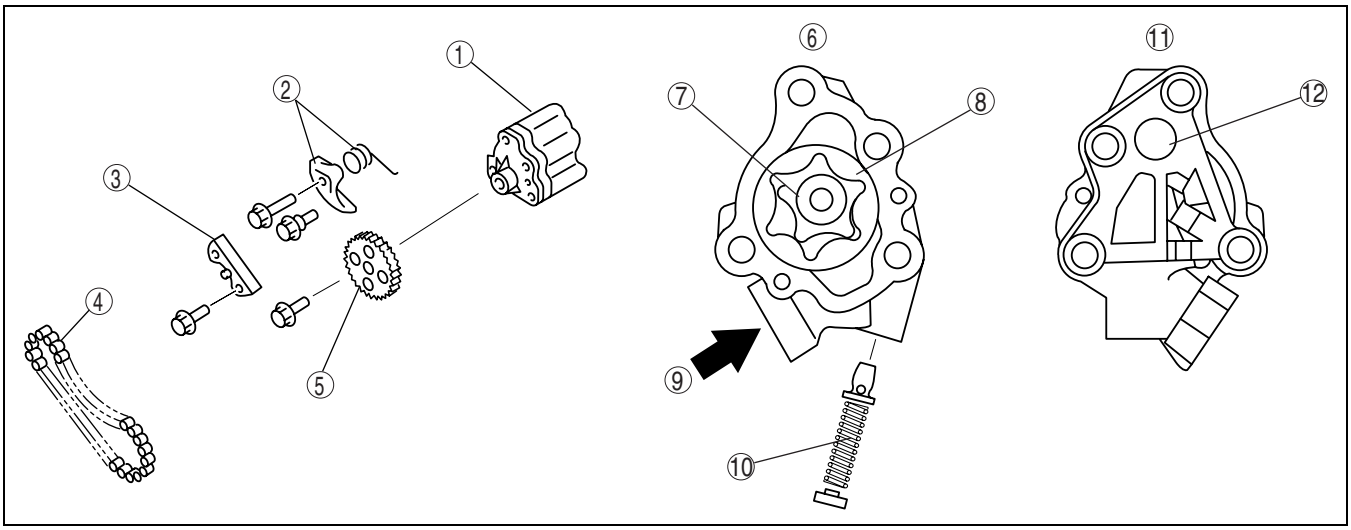

DPE111AT1007

1	Oil pump body (relief valve inside)
2	Oil pump chain tensioner
3	Oil pump chain guide
4	Oil pump chain
5	Oil pump sprocket
6	Front

7	Inner rotor
8	Outer rotor
9	Oil in
10	Relief valve component
11	Rear
12	Oil out

Oil pump specification

Item	Engine speed [rpm]	Specification
Oil discharge pressure (reference value) [Oil temperature: 100 °C {212 °F}] (kPa {kgf/cm^2, psi})	1,500	129— 269 {1.32—2.74, 18.7—39.0}
	3,000	234—521 {2.39—5.31, 33.9—75.5}
Relief valve opening pressure (reference value) (kPa {kgf/cm^2, psi})		450—550 {4.59—5.61, 65.3—79.8}

- A silent chain (link connecting type) has been adopted to the oil pump chain to reduce chain operation noise when the chain and the sprocket engage.
- The engine oil in the engine front cover lubricates the oil pump chain. Wear resistance has been improved using nitriding processing of the pins constructing the oil pump chain.
- The sintered material in the oil pump sprocket has been furnace hardened to improve durability.

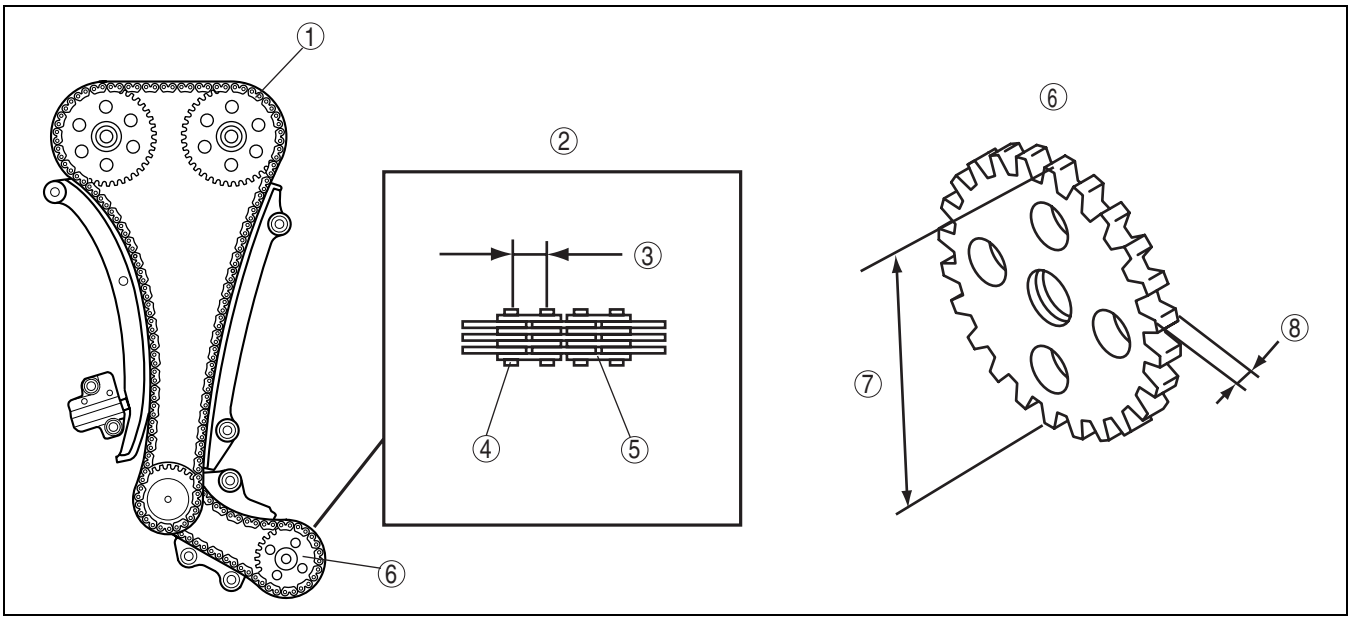

DPE111AT1008

1	Timing chain
2	Oil pump driven chain
3	Pitch size
4	Pin

5	Link
6	Oil pump sprocket
7	Outer diameter
8	Driven tooth width

Oil pump driven chain, oil pump sprocket specification

Item			Specification
Oil pump driven chain	Pitch size	(mm {in})	8 {0.3}
Oil pump sprocket	Outer diameter	(mm {in})	60.78 {2.392}
	Driven tooth width	(mm {in})	6.15 {0.242}

OIL JET VALVE CONSTRUCTION/OPERATION [L8, LF]

DPE011110730T01

Construction

- The oil jet valves are installed in the cylinder block (in the main journal). The oil jet valve nozzles are installed pointed toward the back surface of each piston.
- The oil jet valves are designed to maintain optimum oil pressure in the engine by controlling the oil injection according to the oil pressure applied to the check ball in the oil jet valves.

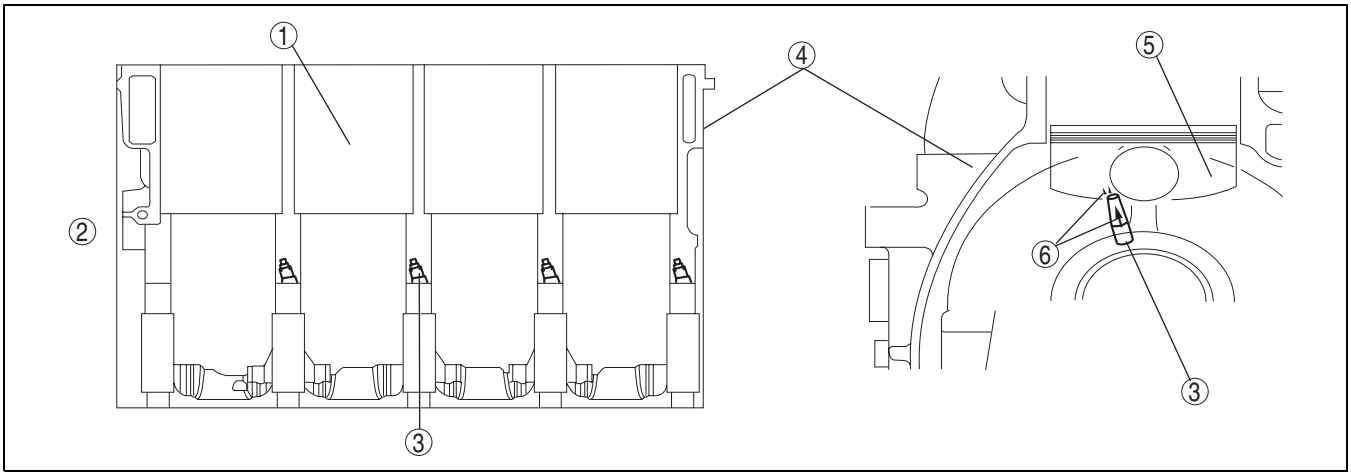

DPE111AT1006

1	Cylinder liner
2	Engine front side
3	Oil jet valve

4	Cylinder block
5	Piston
6	Oil

Operation

- Oil pressure applied to the check-ball in the oil jet valve opens and closes the oil passage-way to the nozzle and controls oil injection starting and stopping.
- Oil pressure greater than the specified value applied to the check-ball in the oil jet valve opens the oil passage to the spring-pressed nozzle, starting injection. Conversely, oil pressure less than the specified value applied to the check-ball blocks the oil passage by spring force, stopping injection.

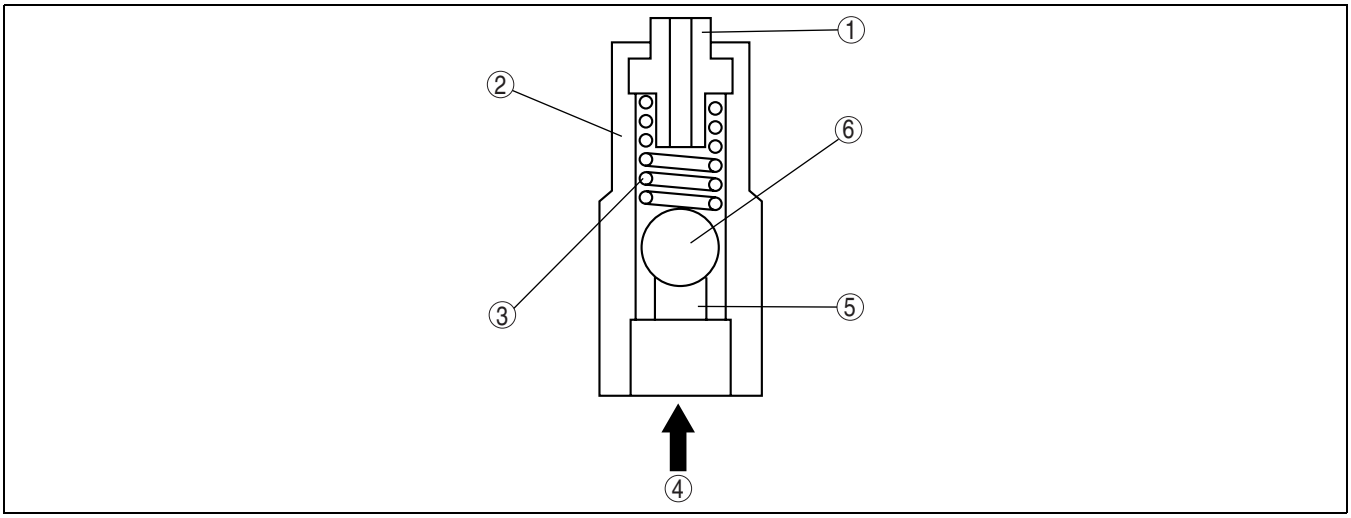

B3E0111T022

1	Nozzle
2	Oil jet valve body
3	Spring

4	Oil
5	Oil passage
6	Check ball

01–12A COOLING SYSTEM [L8, LF]

COOLING SYSTEM OUTLINE [L8, LF] . 01–12A–1
COOLING SYSTEM STRUCTURAL VIEW [L8, LF] 01–12A–1
COOLING SYSTEM FLOW DIAGRAM [L8, LF] 01–12A–2
COOLING SYSTEM CAP CONSTRUCTION [L8, LF] 01–12A–2
RADIATOR CONSTRUCTION [L8, LF]. . 01–12A–2
THERMOSTAT CONSTRUCTION/OPERATION [L8, LF] 01–12A–3
WATER PUMP CONSTRUCTION/OPERATION [L8, LF] 01–12A–3
COOLING FAN COMPONENT CONSTRUCTION [L8, LF] 01–12A–4
FAN CONTROL MODULE CONSTRUCTION/ OPERATION [L8, LF] 01–12A–5

COOLING SYSTEM OUTLINE [L8, LF]

DPE011200000T01

Features

Reduced weight	• Cross flow type radiator with aluminum core and plastic tank adopted • Stainless steel thermostat with plastic thermostat cover adopted
Miniaturization	• Built-in type water pump adopted
Reduced engine noise and vibration	• Electric cooling fan adopted • Fan control module adopted
Reduced power consumption	• Fan control module adopted

COOLING SYSTEM STRUCTURAL VIEW [L8, LF]

DPE011200000T02

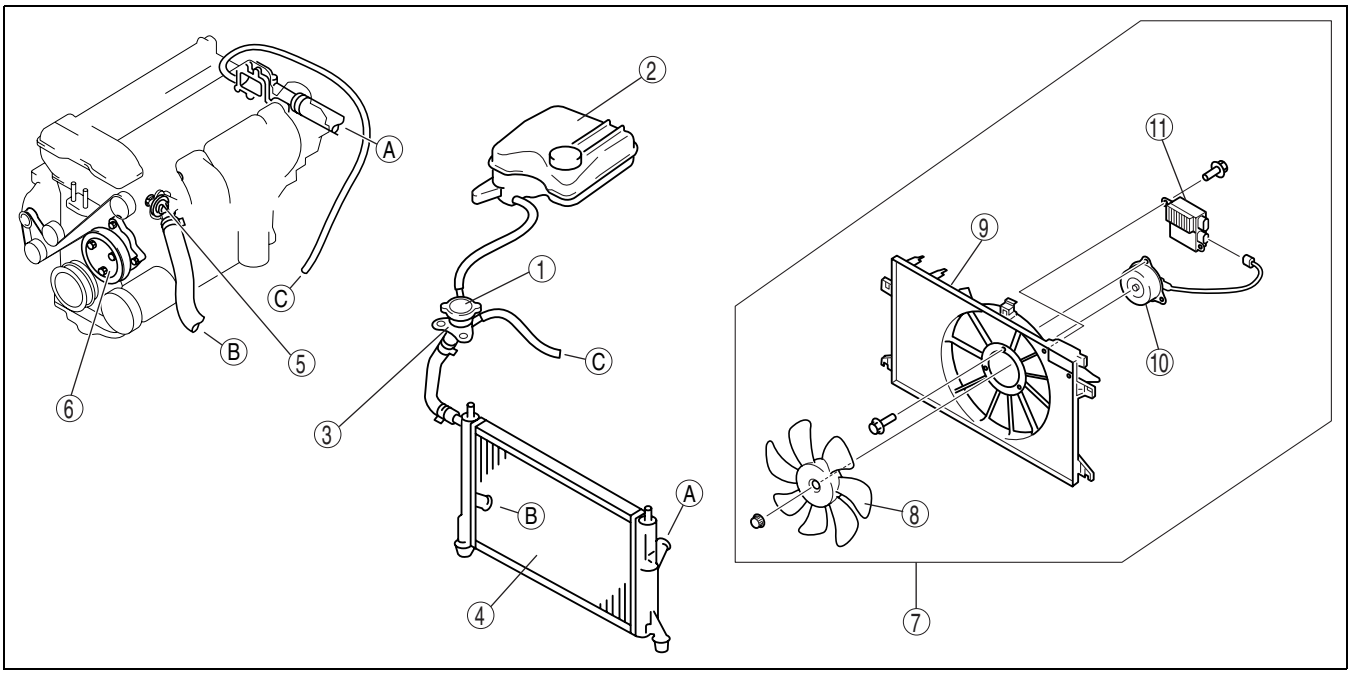

DPE112AT1005

1	Cooling system cap
2	Coolant reserve tank
3	Cooling system filler neck
4	Radiator
5	Thermostat
6	Water pump

7	Cooling fan component
8	Cooling fan
9	Radiator cowling
10	Cooling fan motor
11	Fan control module

COOLING SYSTEM FLOW DIAGRAM [L8, LF]

DPE011200000T03

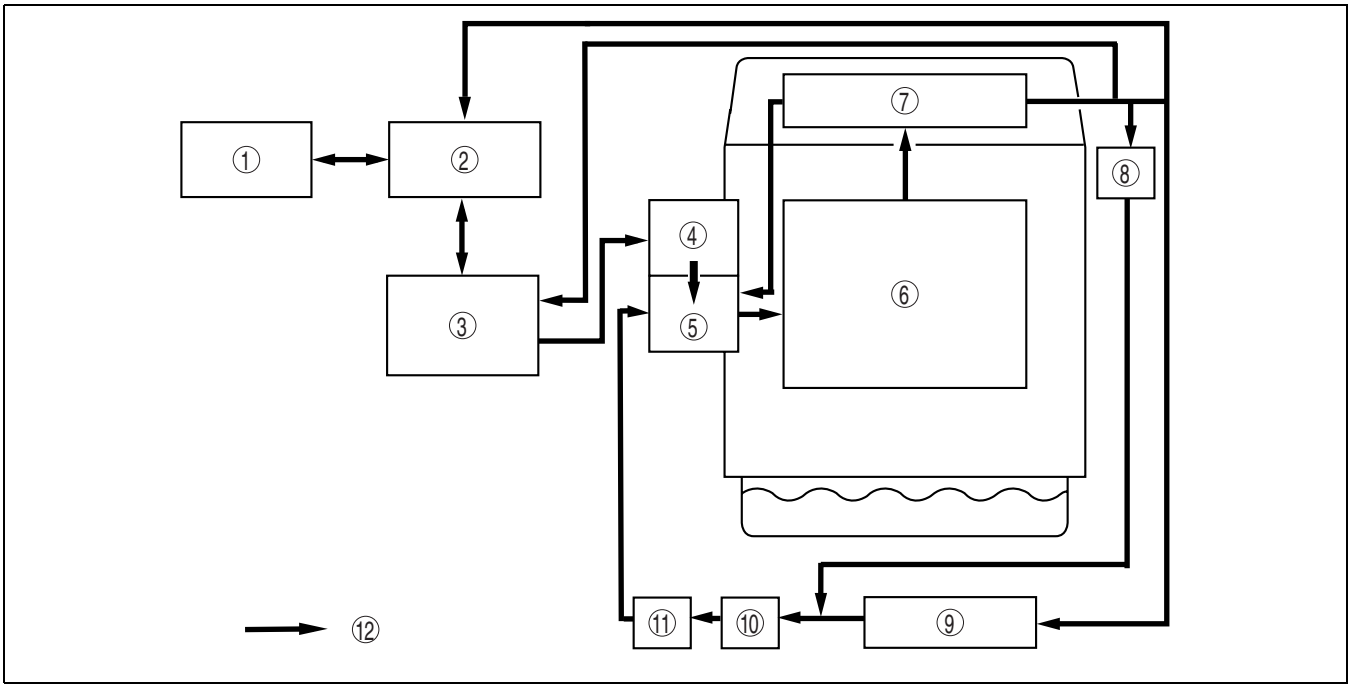

DPE112AT1001

1	Coolant reserve tank
2	Cooling system filler neck
3	Radiator
4	Thermostat
5	Water pump
6	Cylinder block

7	Cylinder head
8	EGR valve
9	Heater
10	Oil cooler (ATX)
11	Oil cooler (if equipped)
12	Coolant flow

COOLING SYSTEM CAP CONSTRUCTION [L8, LF]

DPE011215201T01

- A low-pressure type cap has been adopted for the cooling system cap.
- The cooling system cap is installed on the cooling system filler neck attached to the shroud panel.

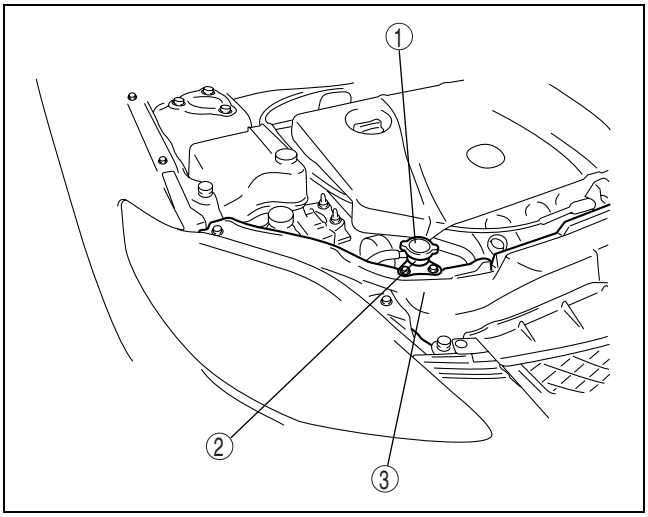

DPE112AT1002

1	Cooling system cap
2	Cooling system filler neck
3	Shroud panel

RADIATOR CONSTRUCTION [L8, LF]

DPE011215200T01

- A cross-flow radiator with corrugated fins is used to improve cooling performance.

- The radiator tanks are made of plastic and the core is made of aluminum for weight reduction.
- Rubber-insulated mounting brackets are utilized on the underside of the radiator to decrease vibration.

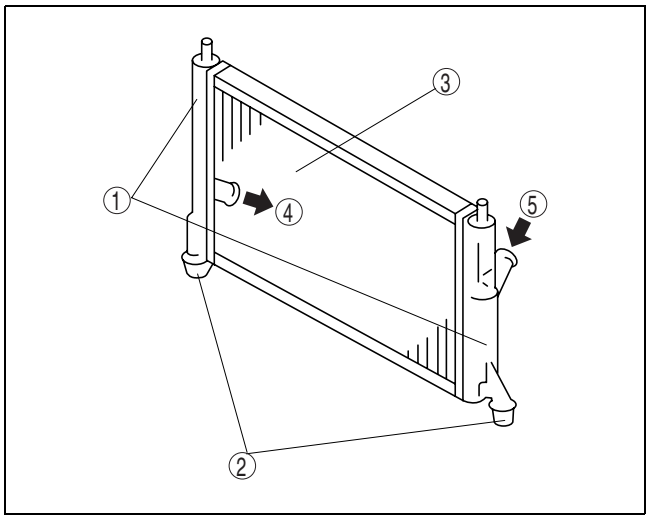

DPE112AT1004

1	Tank
2	Rubber mounting bracket
3	Core
4	To lower radiator hose
5	From upper radiator hose

THERMOSTAT CONSTRUCTION/OPERATION [L8, LF]

DPE011215171T01

Construction

- A wax-type thermostat with a jiggle-valve has been adopted.

Operation

- When the engine coolant temperature reaches 80 °C {176 °F}—84 °C {183 °F}, the valve starts opening to allow engine coolant to flow from the radiator stabilizing the engine coolant temperature. When the engine coolant temperature decreases to approx. 75 °C {167 °F}, the valve closes to stop the engine coolant flow from the radiator.

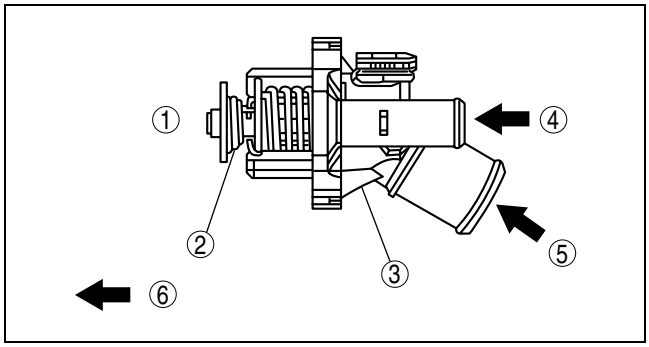

DPE112AT1008

1	Engine side
2	Thermostat
3	Thermostat cover
4	From heater hose
5	From lower radiator hose
6	Coolant flow direction

WATER PUMP CONSTRUCTION/OPERATION [L8, LF]

DPE011215010T01

Construction

- The aluminum alloy water pump with the impeller built into the cylinder block has been adopted for size reduction.

- The water pump is not serviceable and must be replaced as a unit if it has a malfunction.

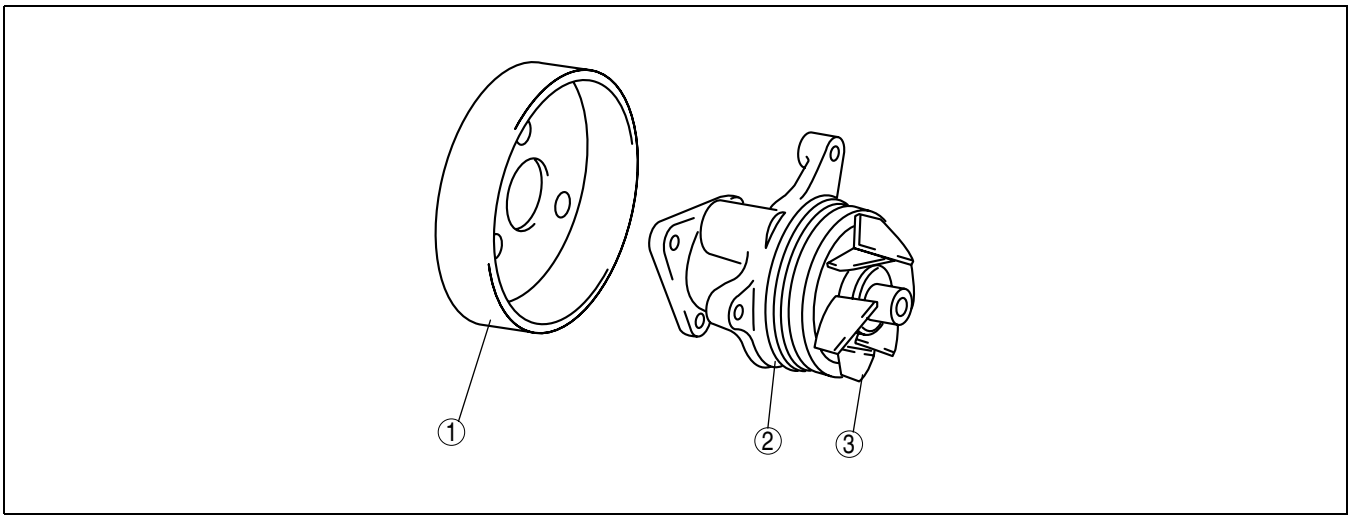

B3E0112T019

1	Water pump pulley
2	Water pump body
3	Impeller

Operation

- The water pump is driven by the generator drive belt.

COOLING FAN COMPONENT CONSTRUCTION [L8, LF]

DPE011215140T01

- The cooling fan component consists of the radiator cowling, cooling fan, cooling fan motor, and fan control module.
- Electric cooling fan, which operates according to the fan control signal sent from the PCM to the fan control module, has been adopted. Due to this, engine noise has been reduced and rapid engine warming-up is possible.
- The radiator cowling and cooling fan are made of plastic for weight reduction.

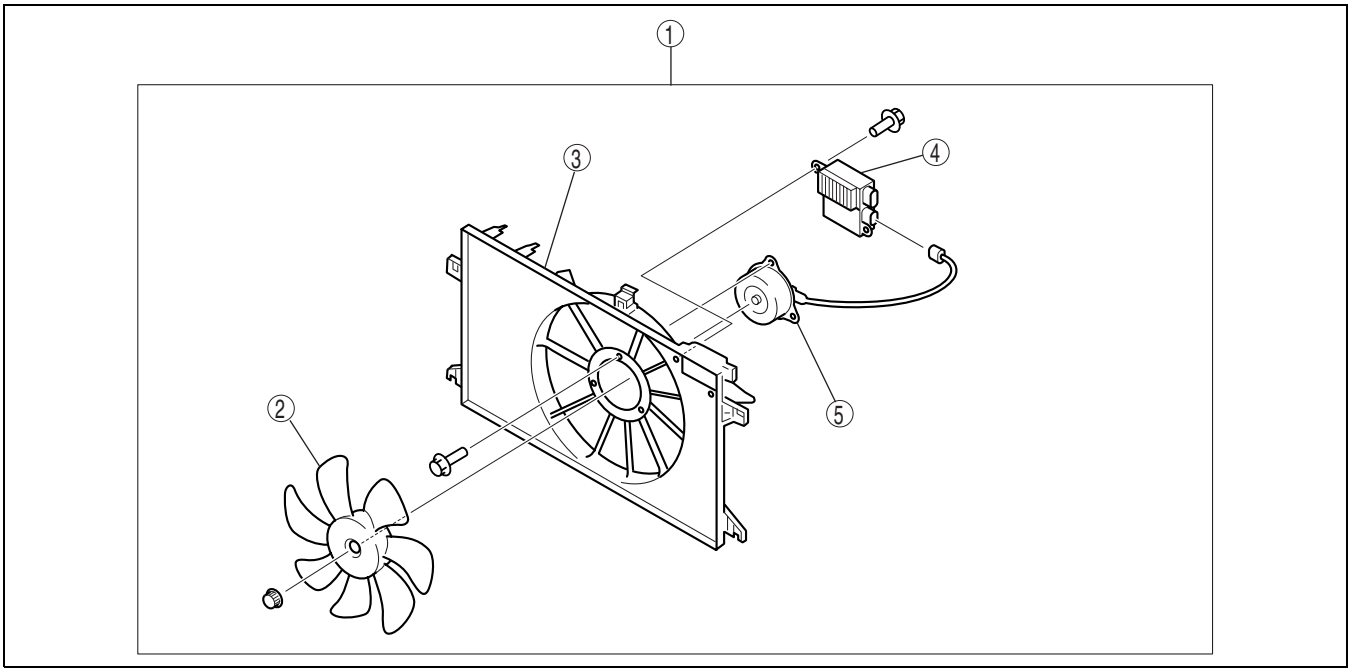

DPE112AT1003

1	Cooling fan component
2	Cooling fan
3	Radiator cowling
4	Fan control module
5	Cooling fan motor

Cooling fan, cooling fan motor specification

Item		Specification
Cooling fan	Number of blades	7
	Outer diameter (mm {in})	360 {14.2}
Cooling fan motor output (W)		240

FAN CONTROL MODULE CONSTRUCTION/OPERATION [L8, LF]

DPE011215150T01

Construction

- Fan control module is installed on the radiator cowling.

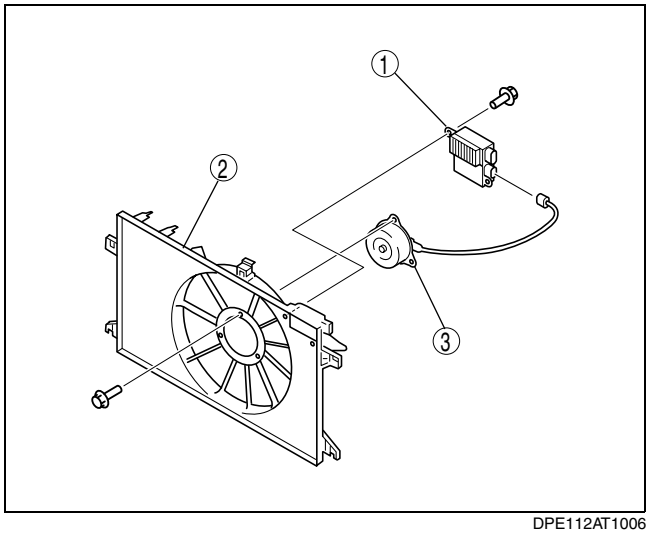

DPE112AT1006

1	Fan control module
2	Radiator cowling
3	Cooling fan motor

Operation

- The fan control module drives the fan motor based on the cooling fan control signal sent by the PCM according to the following:
  — Engine coolant temperature
  — Vehicle speed
  — Battery voltage
  — Whether refrigerant pressure switch is on or off
  — Whether magnetic clutch is on or off
- The fan control module allows continuously variable control of the fan motor rotation rate reducing fan operation noise and power consumption.

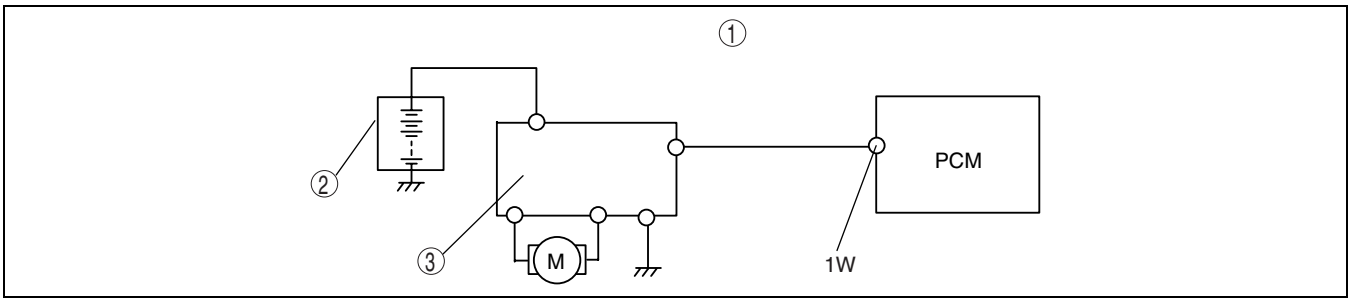

DPE112AT1007

1	Cooling fan electrical system wiring diagram
2	Battery
3	Fan control module

Fail-safe function

1. Over-current fail-safe
   — If current to the fan motor exceeds the specified value, the cooling fan motor stops running for a specified period of time.
2. Over-heat fail-safe
   — If the internal temperature of the fan control module exceeds a specified temperature, the cooling fan motor

starts running at high speed. If the temperature continues to increase and exceeds a specified temperature, the cooling fan motor stops running. (When the ignition switch is turned off, it returns to normal operation.)

3. Input signal open circuit fail-safe
   — If there is an open circuit in the wiring harness between the PCM and fan control module, the cooling fan motor runs at high speed.

01–13A INTAKE-AIR SYSTEM [L8, LF]

INTAKE AIR SYSTEM OUTLINE [L8, LF] 01–13A–1
INTAKE AIR SYSTEM STRUCTURAL VIEW [L8, LF] 01–13A–2
INTAKE AIR SYSTEM DIAGRAM [L8, LF] 01–13A–2
INTAKE AIR SYSTEM HOSE ROUTING DIAGRAM [L8, LF] 01–13A–3
RESONANCE CHAMBER FUNCTION [L8, LF] 01–13A–4
AIR CLEANER CONSTRUCTION [L8, LF] 01–13A–4
THROTTLE BODY CONSTRUCTION [L8, LF] 01–13A–5
IDLE AIR CONTROL (IAC) VALVE FUNCTION [L8, LF]. 01–13A–5
IDLE AIR CONTROL (IAC) VALVE CONSTRUCTION/OPERATION [L8, LF] 01–13A–5
INTAKE MANIFOLD CONSTRUCTION [L8, LF] 01–13A–5
VARIABLE INTAKE AIR SYSTEM FUNCTION [LF]. 01–13A–6
VARIABLE INTAKE AIR SYSTEM STRUCTURE [LF] 01–13A–7
VARIABLE INTAKE AIR SYSTEM OPERATION [LF] 01–13A–7
VARIABLE TUMBLE SYSTEM FUNCTION [L8, LF] 01–13A–8
VARIABLE TUMBLE SYSTEM STRUCTURE [L8, LF] 01–13A–8
VARIABLE TUMBLE SYSTEM OPERATION [L8, LF] 01–13A–8
VARIABLE INTAKE AIR SOLENOID VALVE FUNCTION [LF] 01–13A–9
VARIABLE INTAKE AIR SOLENOID VALVE CONSTRUCTION/OPERATION [LF] . . .01–13A–9
VARIABLE TUMBLE SOLENOID VALVE FUNCTION [L8, LF] 01–13A–10
VARIABLE TUMBLE SOLENOID VALVE CONSTRUCTION/OPERATION [L8, LF] 01–13A–10
VARIABLE INTAKE AIR SHUTTER VALVE ACTUATOR FUNCTION [LF] 01–13A–10
VARIABLE INTAKE AIR SHUTTER VALVE ACTUATOR CONSTRUCTION/OPERATION [LF] 01–13A–10
VARIABLE TUMBLE SHUTTER VALVE ACTUATOR FUNCTION [L8, LF] 01–13A–11
VARIABLE TUMBLE SHUTTER VALVE ACTUATOR CONSTRUCTION/OPERATION [L8, LF] 01–13A–11

INTAKE AIR SYSTEM OUTLINE [L8, LF]

DPE011300000T01

Features

Improved engine torque	• Variable intake air system adopted (LF)
Improved noise reduction	• Resonance chamber adopted
Improved emission gas purification	• Variable tumble system adopted

INTAKE AIR SYSTEM STRUCTURAL VIEW [L8, LF]

DPE011300000T02

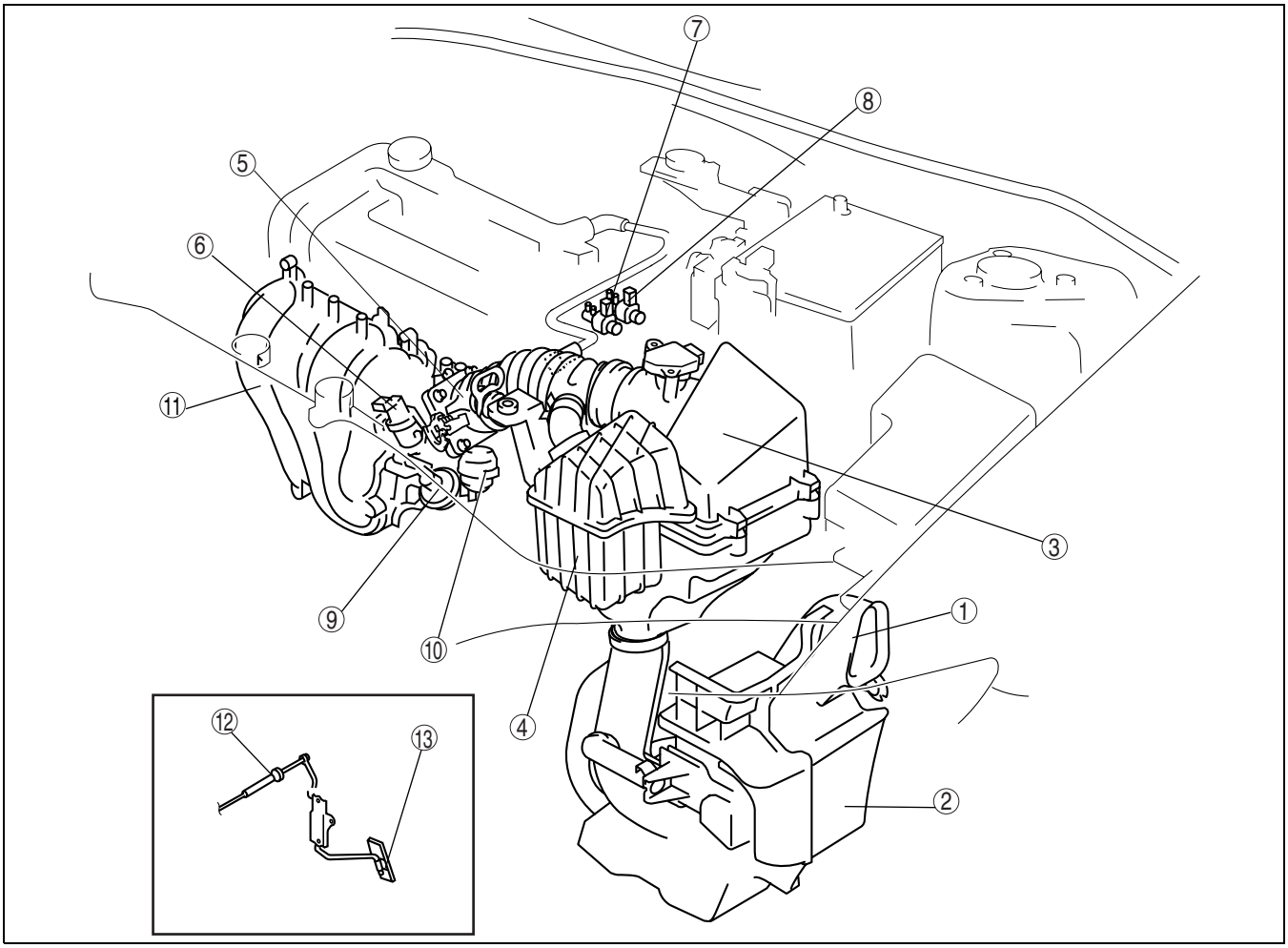

DPE0113ZT2001

1	Fresh-air duct
2	Resonance chamber (fresh-air duct side)
3	Air cleaner
4	Resonance chamber (air cleaner side)
5	Throttle body
6	IAC valve
7	Variable intake air solenoid valve (LF)

8	Variable tumble solenoid valve
9	Variable intake air shutter valve actuator (LF)
10	Variable tumble shutter valve actuator
11	Intake manifold
12	Accelerator cable
13	Accelerator pedal

INTAKE AIR SYSTEM DIAGRAM [L8, LF]

DPE011300000T03

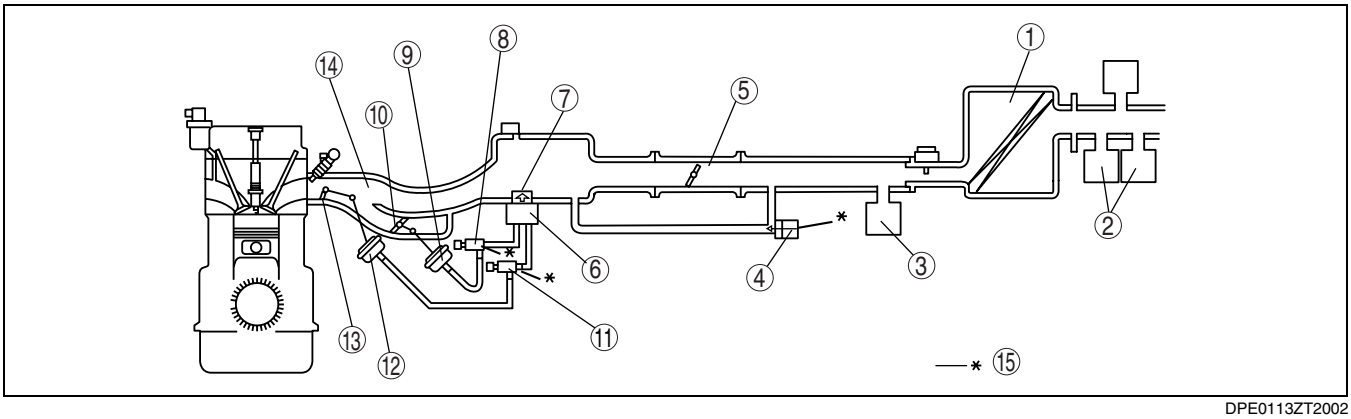

DPE0113ZT2002

1	Air cleaner
2	Resonance chamber (fresh-air duct side)
3	Resonance chamber (air cleaner side)
4	IAC valve
5	Throttle body
6	Vacuum chamber
7	Check valve
8	Variable intake air solenoid valve (LF)

9	Variable intake air shutter valve actuator (LF)
10	Variable intake air shutter valve (LF)
11	Variable tumble solenoid valve
12	Variable tumble shutter valve actuator
13	Variable tumble shutter valve
14	Intake manifold
15	To PCM

INTAKE AIR SYSTEM HOSE ROUTING DIAGRAM [L8, LF]

DPE011300000T04

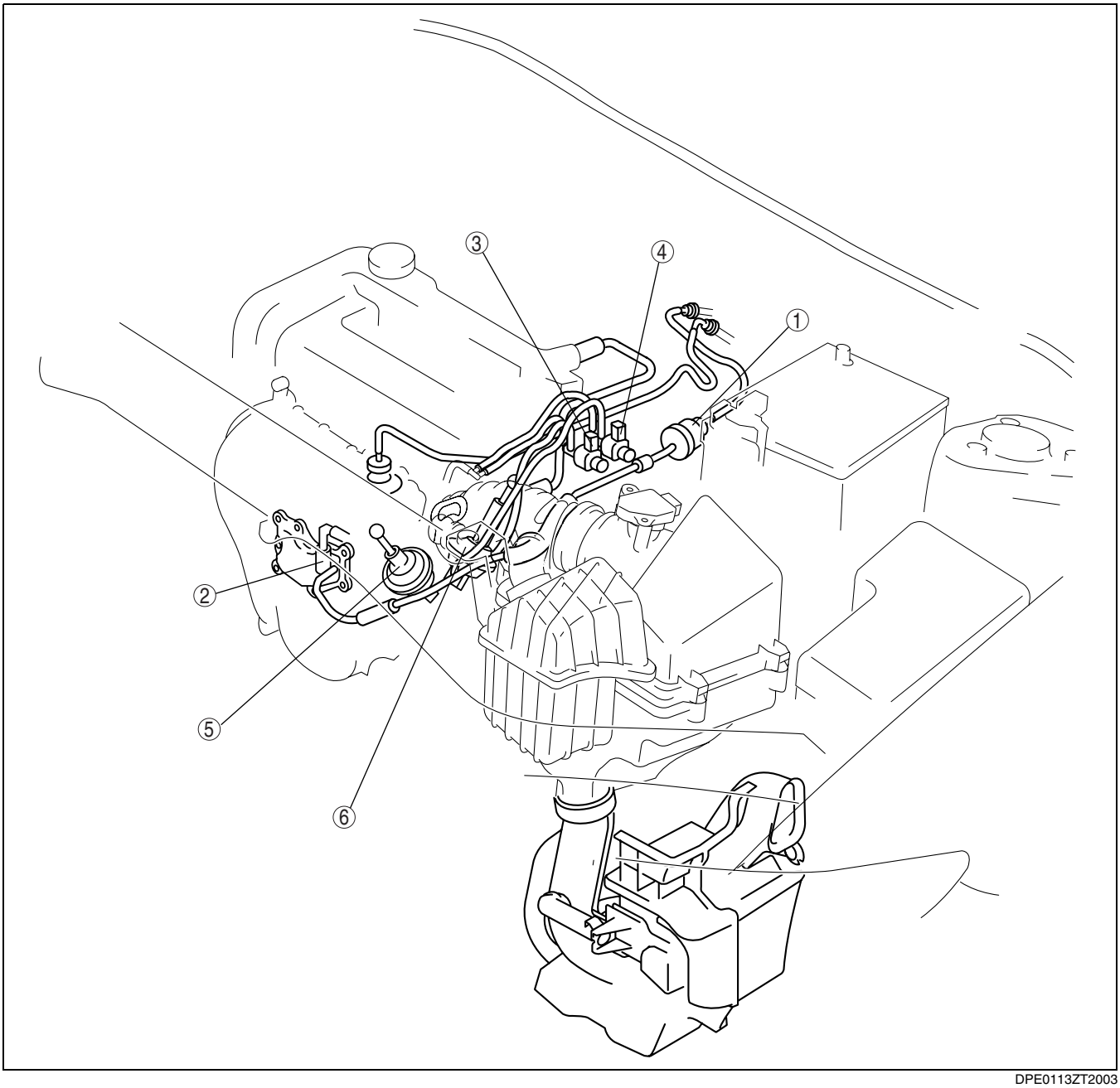

DPE0113ZT2003

1	Purge solenoid valve
2	Positive crankcase ventilation (PCV) valve
3	Variable intake air solenoid valve (LF)

4	Variable tumble solenoid valve
5	Variable intake air shutter valve actuator (LF)
6	Variable tumble shutter valve actuator

RESONANCE CHAMBER FUNCTION [L8, LF]

DPE011313191T01

- Installed on the fresh air duct and air cleaner to reduce intake air noise.

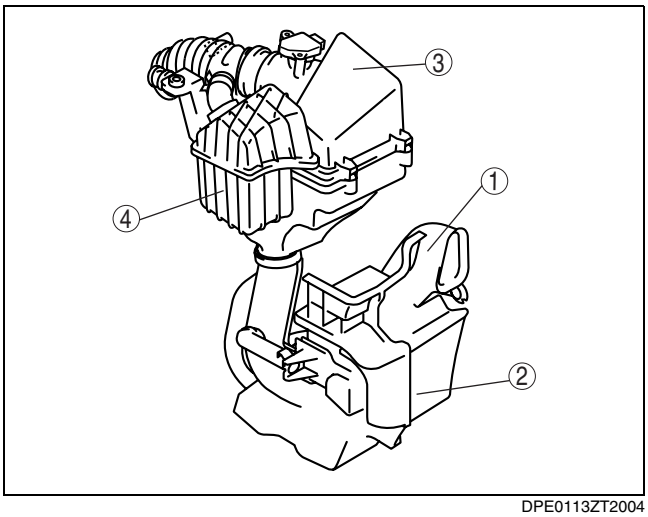

DPE0113ZT2004

1	Fresh-air duct
2	Resonance chamber (fresh-air duct side)
3	Air cleaner
4	Resonance chamber (air cleaner side)

AIR CLEANER CONSTRUCTION [L8, LF]

DPE011313300T01

- Mainly composed of the air cleaner case, air cleaner cover, and air cleaner element.
- Non-woven fabric (dry type) element has been adopted.

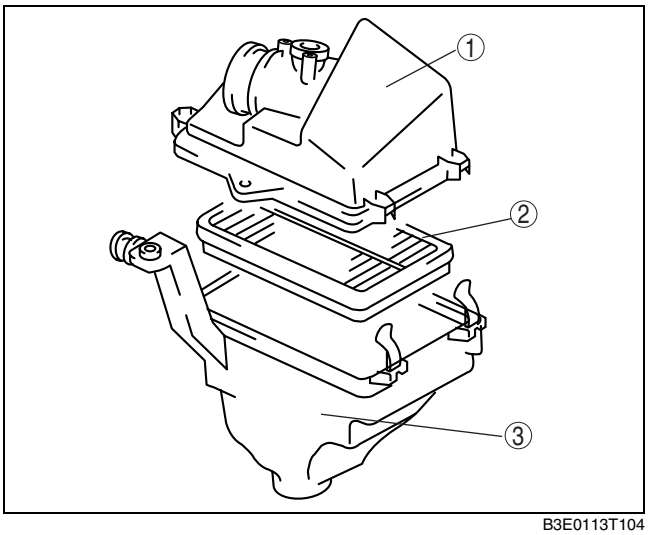

B3E0113T104

1	Air cleaner cover
2	Air cleaner element
3	Air cleaner case

THROTTLE BODY CONSTRUCTION [L8, LF]

DPE011313640T01

- Consists of the throttle position sensor, and throttle valve.

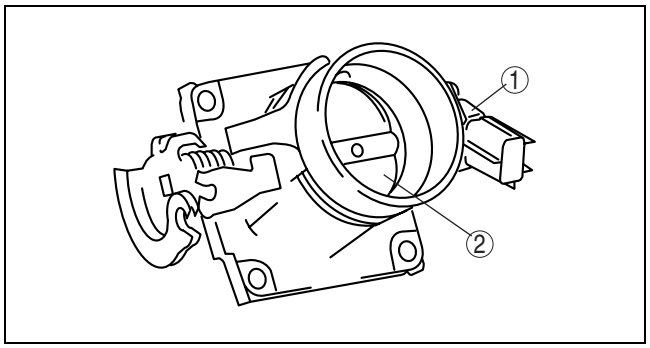

B3E0113T106

1	Throttle position sensor
2	Throttle valve

IDLE AIR CONTROL (IAC) VALVE FUNCTION [L8, LF]

DPE011320661T01

- Electronically adjusts the amount of air that bypasses the throttle valve.

IDLE AIR CONTROL (IAC) VALVE CONSTRUCTION/OPERATION [L8, LF]

DPE011320661T02

Construction

- Installed on the intake manifold.
- Mainly consists of the housing, valve, plunger and coil.

Operation

- Air that bypasses the throttle valve passes from the air hose upstream of the throttle valve, through the IAC valve and is suctioned towards the intake manifold downstream of the throttle valve.
- The valve moves according to a duty signal from the PCM and the size of the bypass passage opening varies accordingly.
- The amount of air that bypasses the throttle valve varies according to the size of the bypass opening; the larger the opening, the more air that is bypassed.

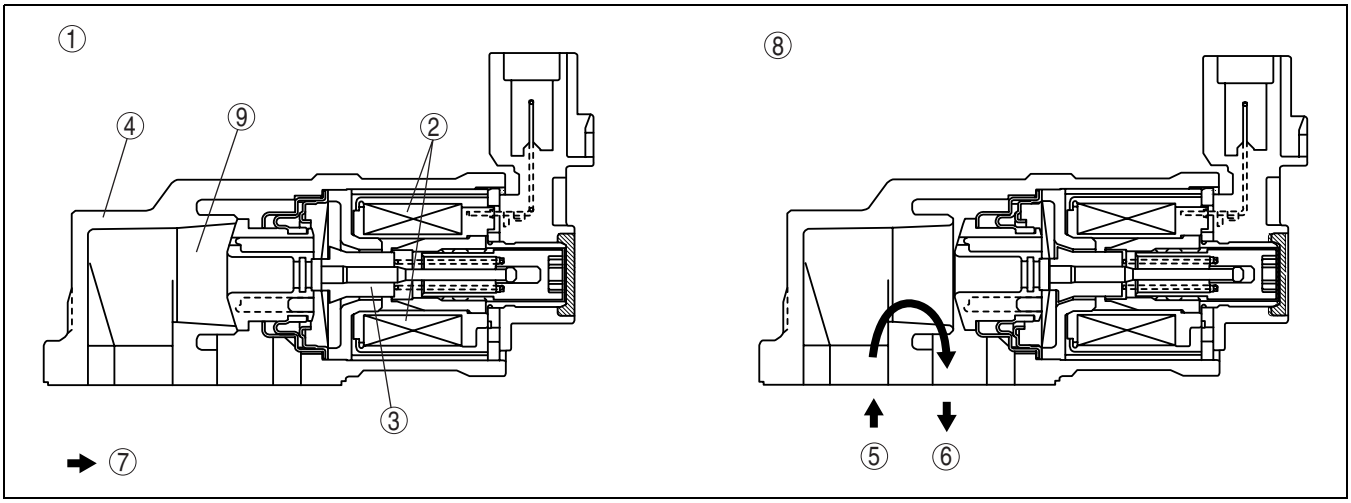

B3E0113T020

1	Not energized
2	Coil
3	Plunger
4	Housing
5	From air hose

6	To intake manifold
7	Atmospheric air flow
8	Energized
9	Valve

INTAKE MANIFOLD CONSTRUCTION [L8, LF]

DPE011313100T01

- The intake manifold mainly consists of the variable intake air shutter valve actuator and variable tumble shutter valve actuator.

- Made of hard plastic for weight reduction.

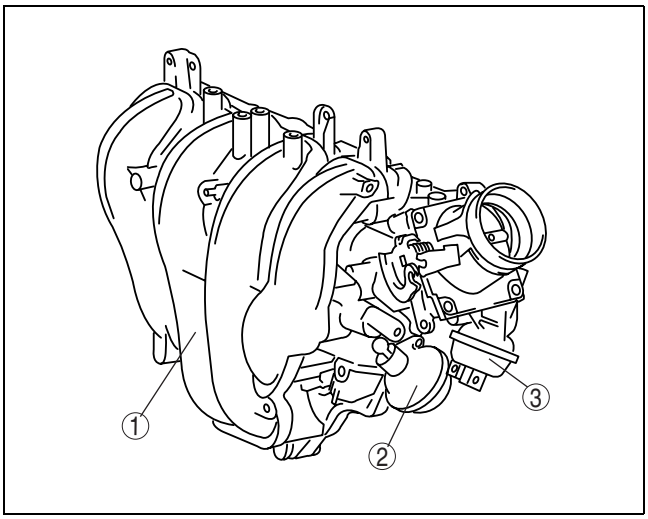

B3E0113T108

1	Intake manifold
2	Variable intake air shutter valve actuator (LF)
3	Variable tumble shutter valve actuator

VARIABLE INTAKE AIR SYSTEM FUNCTION [LF]

DPE011300020T01

- The variable intake air system maintains high torque from the low to high engine speed ranges.
- Changes the effective intake manifold length when the engine speed borders on **4,750 rpm** to enhance the inertia charging effect. As a result, higher torque is obtained in all ranges.
- For the variable intake air control, refer to CONTROL SYSTEM, Variable intake air Control (See 01–40A–15 VARIABLE INTAKE AIR CONTROL OUTLINE [LF].)

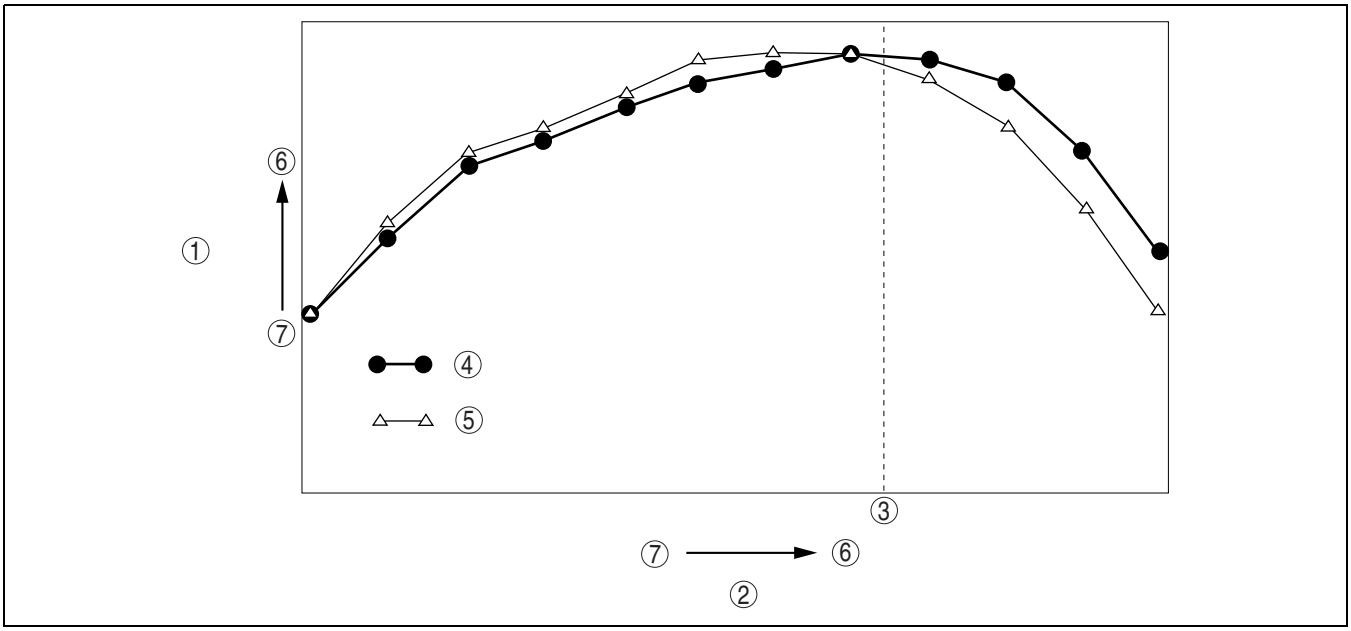

B3E0113T109

1	Engine torque
2	Engine speed
3	Approx. 4,750 RPM
4	Variable intake air shutter valve open

5	Variable intake air shutter valve closed
6	High
7	Low

Inertia charging effect

— Airflow in the intake air pipe pulsates according to the opening and closing of the intake valve. When the intake valve closes, intake air is compressed near the intake valve due to inertia force. The resulting pressure wave is reflected to the throttle valve side by the intake valve and the wave is then reflected back

to the intake valve side when it reaches the dynamic chamber. The effective intake manifold length is controlled so that the pressure wave returns to the intake valve at the intake stroke. Due to this, air intake volume increases, resulting in higher torque.

Effective intake manifold length

— The effective intake manifold length is the length from the intake valve to the dynamic chamber.

— The effective intake manifold length changes according to the positioning of the reflected pressure wave transmitted through the intake air pipe by the opening and closing of the variable intake air shutter valve in the intake manifold.

VARIABLE INTAKE AIR SYSTEM STRUCTURE [LF]

DPE011300020T02

- Mainly consists of the variable intake air solenoid valve, variable intake air shutter valve, variable intake air shutter valve actuator, dynamic chamber and vacuum chamber.

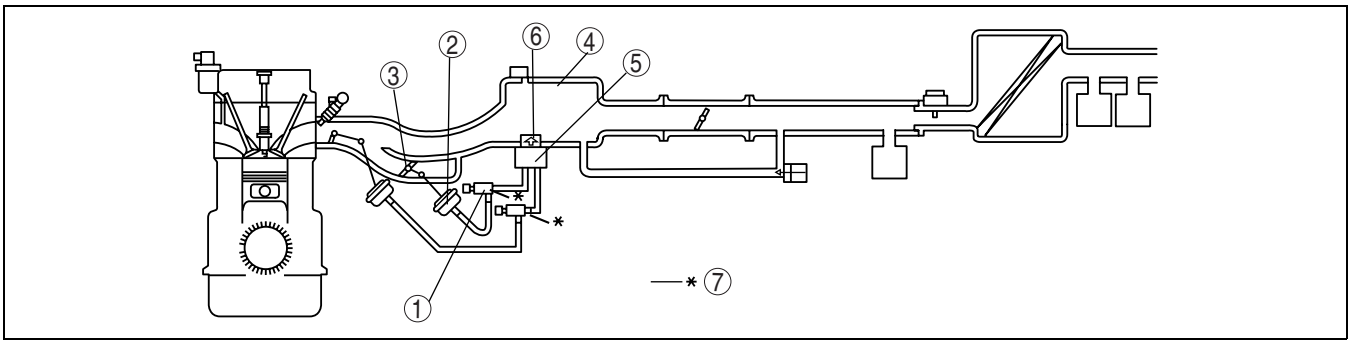

B3E0113T110

1	Variable intake air solenoid valve
2	Variable intake air shutter valve actuator
3	Variable intake air shutter valve
4	Dynamic chamber

5	Vacuum chamber
6	Check valve
7	To PCM

VARIABLE INTAKE AIR SYSTEM OPERATION [LF]

DPE011300020T03

At engine speed less than 4,750 rpm (variable intake air shutter valve is closed)

- Intake manifold vacuum is applied to the variable intake air shutter valve by the operation of the variable intake air solenoid valve, closing the variable intake air shutter valve.
- Under this condition, the effective intake manifold length is from the intake valve to the dynamic chamber (A—C). An inertia charging effect is obtained due to this elongated intake manifold length, air intake volume increases, and higher torque is obtained at low to medium engine speeds.

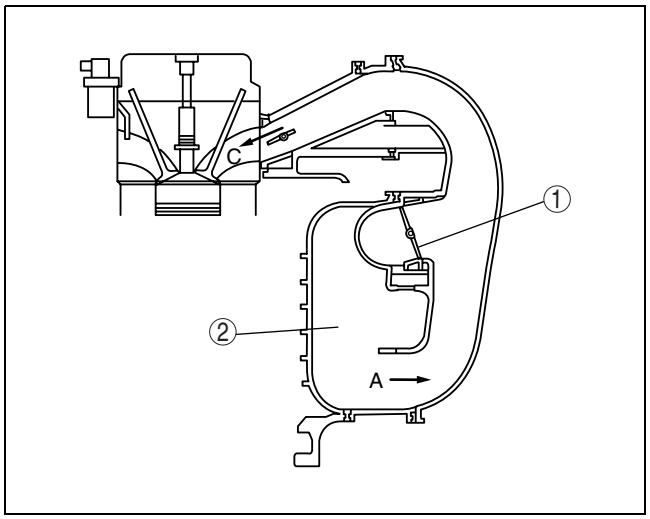

B3E0113T111

1	variable intake air shutter valve (closed)
2	Dynamic chamber

At engine speed of 4,750 rpm or more (variable intake air shutter valve is open)

- The variable intake air shutter valve is open.

- Under this condition, the effective intake manifold length is from the intake valve to the chamber (B—C). The intake air inertia effect is obtained at high engine speeds due to this shortened intake air pipe, increasing intake airflow amount in the cylinder, and higher torque at high engine speeds is obtained.

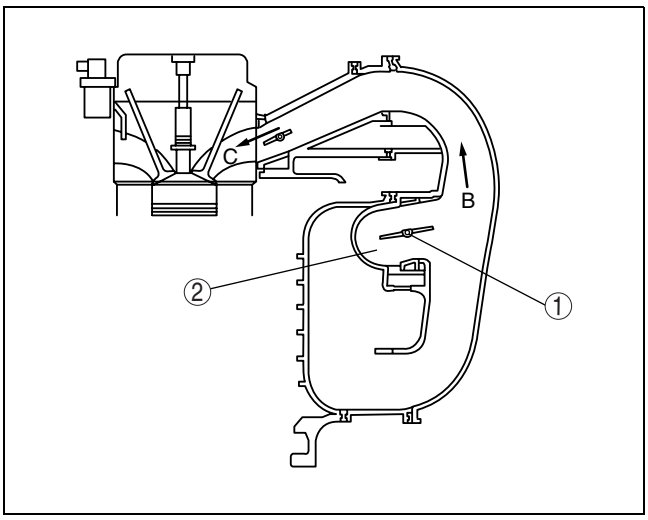

B3E0113T112

1	Variable intake air shutter valve (open)
2	Dynamic chamber

VARIABLE TUMBLE SYSTEM FUNCTION [L8, LF]

DPE011300050T01

- The variable tumble system functions to lower emissions at cold-engine start.
- At cold-engine start, the variable tumble system increases intake airflow speed by closing the shutter valve and narrowing the intake passage. As a result, the air-fuel mixture quality from the injector is improved. Additionally, the creation of a powerful air tumble in the combustion chamber promotes the atomization of the air-fuel mixture. Due to this, exhaust emission efficiency is improved.
- For the variable tumble control, refer to CONTROL SYSTEM, Variable Tumble Control.
  (See 01–40A–15 VARIABLE TUMBLE CONTROL OUTLINE [L8, LF].)

VARIABLE TUMBLE SYSTEM STRUCTURE [L8, LF]

DPE011300050T02

- Mainly consists of the variable tumble solenoid valve, variable tumble shutter valve, variable tumble shutter valve actuator, and vacuum chamber.

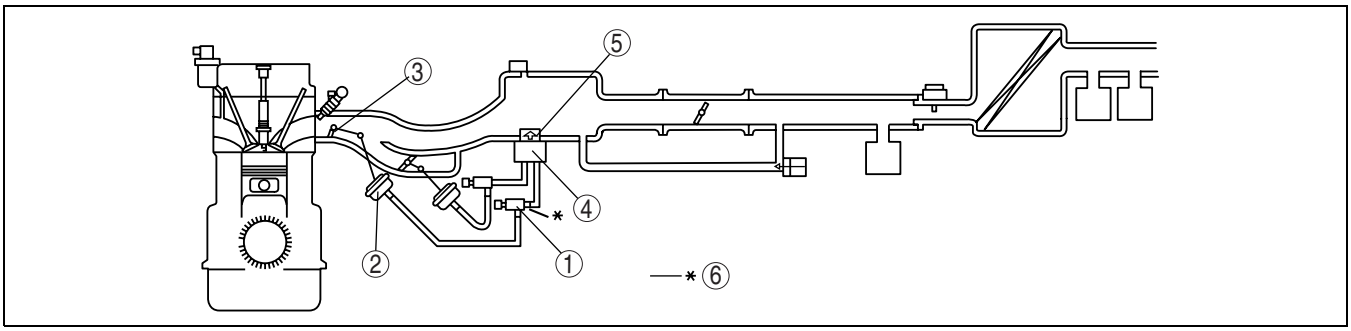

B3E0113T113

1	Variable tumble solenoid valve
2	Variable tumble shutter valve actuator
3	Variable tumble shutter valve

4	Vacuum chamber
5	Check valve
6	To PCM

VARIABLE TUMBLE SYSTEM OPERATION [L8, LF]

DPE011300050T03

Engine speed approx. 3,750 rpm or more and engine coolant temperature approx. 63°C {145°F} and more

(variable tumble shutter valve is closed)

- Intake manifold vacuum is applied to the variable tumble shutter valve actuator by the operation of the variable tumble solenoid valve, closing the variable tumble shutter valve. At this time, the intake passage is narrower than normal, increasing intake airflow speed and also creating a powerful air tumble in the combustion chamber.

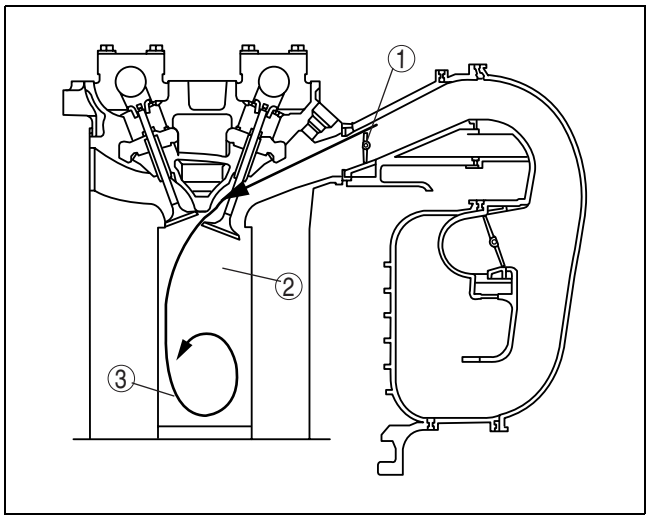

B3E0113T114

1	Variable tumble shutter valve (closed)
2	Combustion chamber
3	Air tumble

VARIABLE INTAKE AIR SOLENOID VALVE FUNCTION [LF]

DPE011318740T01

- Switches the intake manifold vacuum passage between the intake manifold and the actuator.

VARIABLE INTAKE AIR SOLENOID VALVE CONSTRUCTION/OPERATION [LF]

DPE011318740T02

Construction

- Mainly composed of the solenoid coil, spring, and plunger.

Operation

Energized

- The solenoid coil magnetizes, pulling the plunger. The passage between A and B ports opens due to the plunger being pulled, and intake manifold vacuum is applied to the actuator.

Not energized

- The intake manifold vacuum passage is blocked, and the passage between ports B and C opens, depressurizing the actuator.

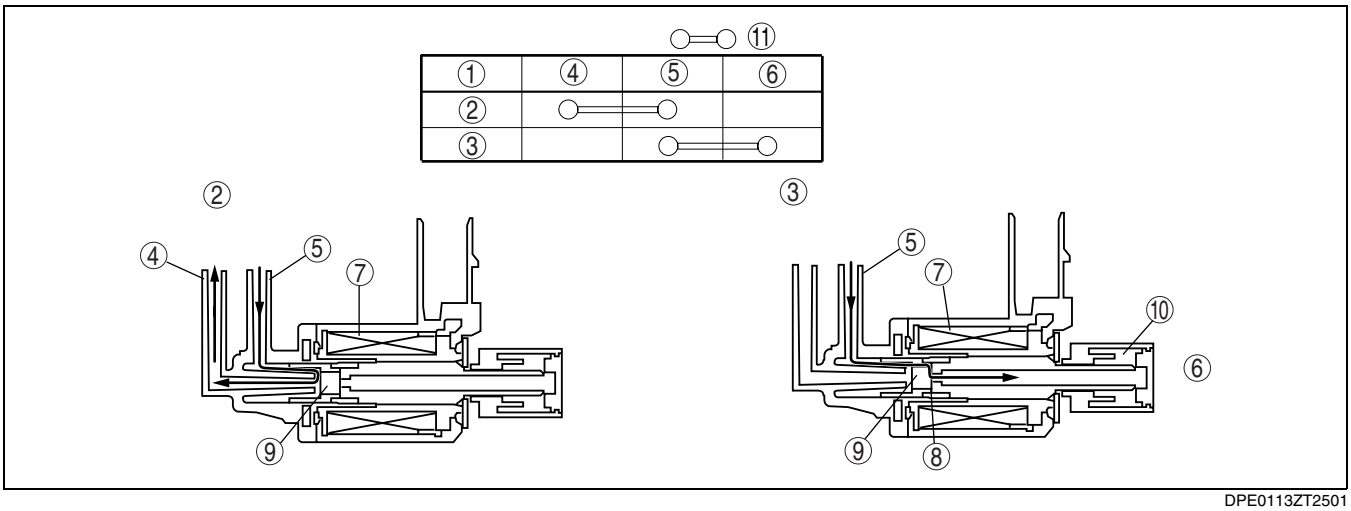

DPE0113ZT2501

1	Connected to
2	Energized
3	Not energized
4	Port A (to intake manifold)
5	Port B (to actuator)
6	Port C (to atmospheric air)

7	Solenoid coil
8	Spring
9	Plunger
10	Filter
11	Airflow

VARIABLE TUMBLE SOLENOID VALVE FUNCTION [L8, LF]

DPE011318745T01

- Switches the intake manifold vacuum passage between the intake manifold and the actuator.

VARIABLE TUMBLE SOLENOID VALVE CONSTRUCTION/OPERATION [L8, LF]

DPE011318745T02

Construction

- Mainly composed of the solenoid coil, spring, and plunger.

Operation

Energized

- The solenoid coil magnetizes, pulling the plunger. The passage between A and B ports opens due to the plunger being pulled, and intake manifold vacuum is applied to the actuator.

Not energized

- The intake manifold vacuum passage is blocked, and the passage between ports B and C opens, depressurizing the actuator.

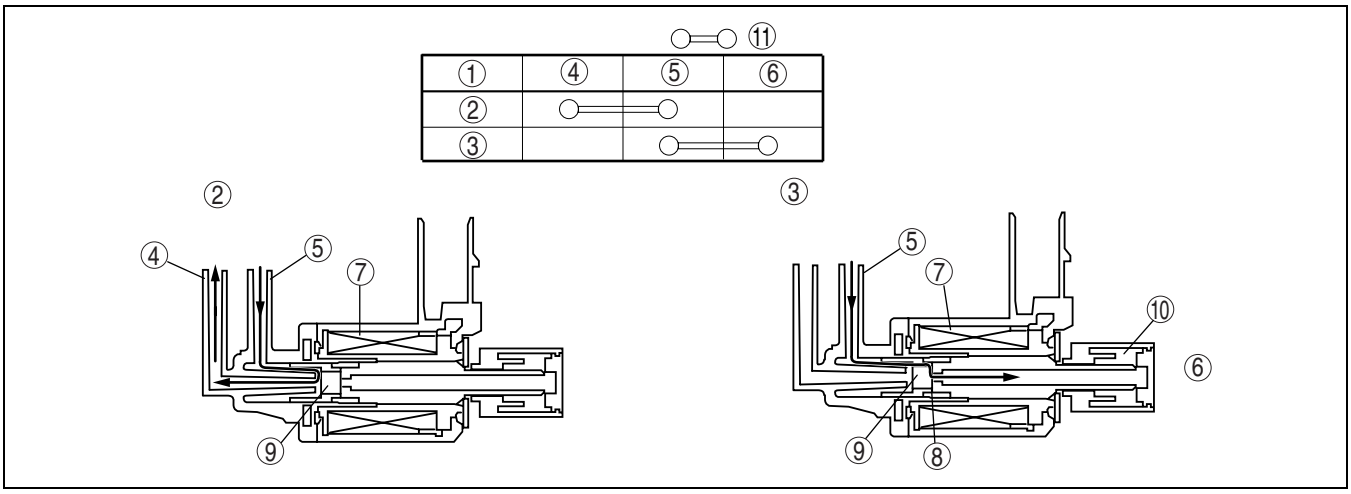

DPE0113ZT2501

1	Connected to
2	Energized
3	Not energized
4	Port A (to intake manifold)
5	Port B (to actuator)
6	Port C (to atmospheric air)

7	Solenoid coil
8	Spring
9	Plunger
10	Filter
11	Airflow

VARIABLE INTAKE AIR SHUTTER VALVE ACTUATOR FUNCTION [LF]

DPE011320132T01

- Opens and closes the shutter valve.

VARIABLE INTAKE AIR SHUTTER VALVE ACTUATOR CONSTRUCTION/OPERATION [LF]

DPE011320132T02

Construction

- Mainly consists of the body, rod and diaphragm chamber spring.

Operation

- Normally, the spring force presses against the rod, keeping the shutter valve open. When vacuum is applied to the diaphragm chamber from the intake manifold, the rod is pulled, closing the shutter valve.

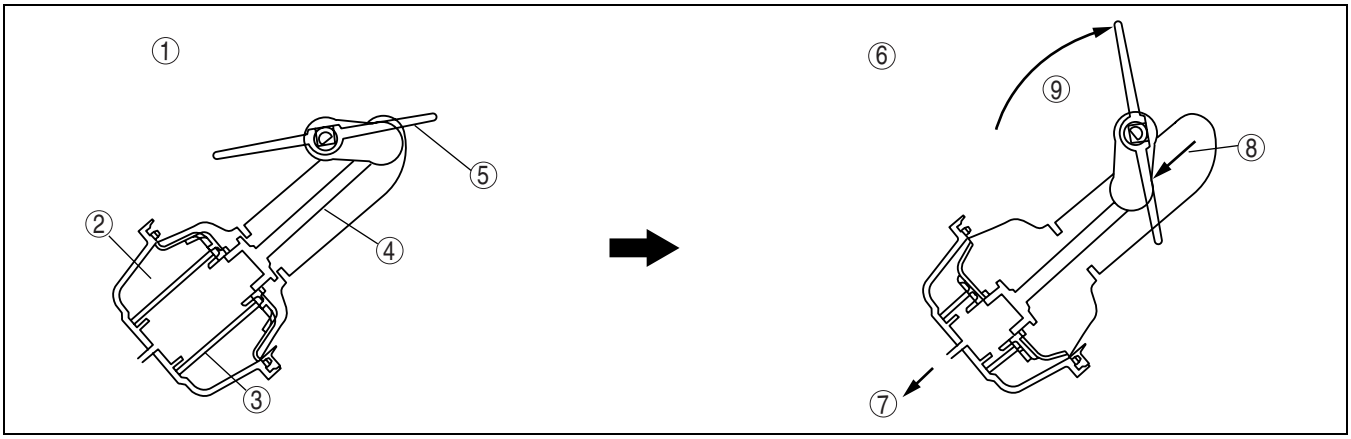

B3E0113T116

1	Normal status (depressurized)
2	Diaphragm chamber
3	Spring
4	Rod
5	Shutter valve (open)

6	Vacuum applied
7	Vacuum applied
8	Rod pulled
9	Shutter valve (closed)

VARIABLE TUMBLE SHUTTER VALVE ACTUATOR FUNCTION [L8, LF]

DPE011320135T01

- Opens and closes the shutter valve.

VARIABLE TUMBLE SHUTTER VALVE ACTUATOR CONSTRUCTION/OPERATION [L8, LF]

DPE011320135T02

Construction

- Mainly consists of the body, rod and diaphragm chamber spring.

Operation

- Normally, the spring force presses against the rod, keeping the shutter valve open. When vacuum is applied to the diaphragm chamber from the intake manifold, the rod is pulled, closing the shutter valve.

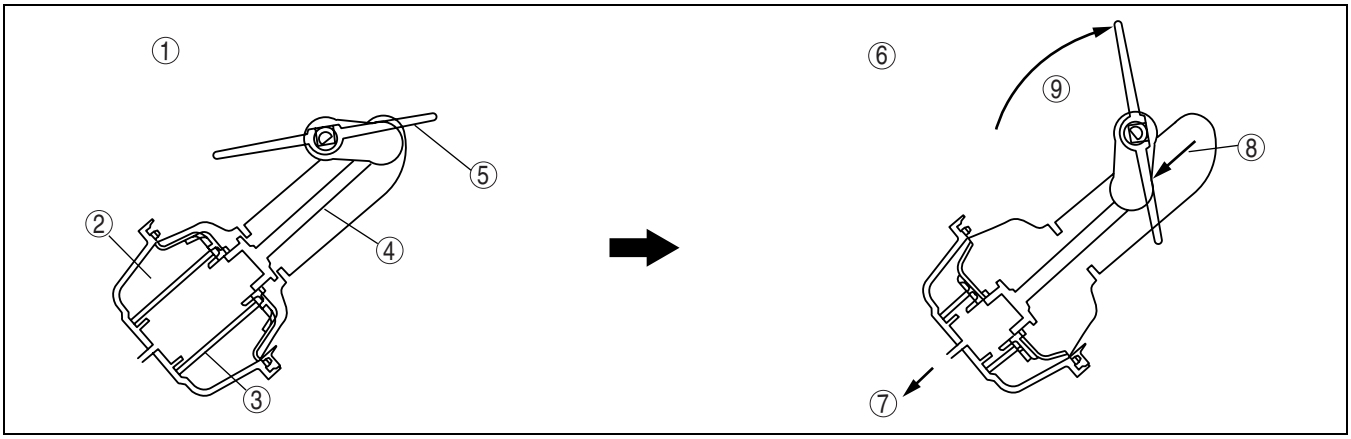

B3E0113T116

1	Normal status (depressurized)
2	Diaphragm chamber
3	Spring
4	Rod
5	Shutter valve (open)

6	Vacuum applied
7	Vacuum applied
8	Rod pulled
9	Shutter valve (closed)

01–14A FUEL SYSTEM [L8, LF]

FUEL SYSTEM OUTLINE [L8, LF] 01–14A–1
FUEL SYSTEM STRUCTURAL VIEW [L8, LF] 01–14A–2
FUEL SYSTEM FLOW DIAGRAM [L8, LF] 01–14A–3
RETURNLESS FUEL SYSTEM OUTLINE [L8, LF] 01–14A–4
RETURNLESS FUEL SYSTEM OPERATION [L8, LF] 01–14A–4
FUEL TANK CONSTRUCTION [L8, LF] . 01–14A–4
NONRETURN VALVE FUNCTION [L8, LF] 01–14A–4
NONRETURN VALVE CONSTRUCTION/ OPERATION [L8, LF] 01–14A–4
FUEL PUMP UNIT FUNCTION [L8, LF]. . 01–14A–4
FUEL PUMP UNIT CONSTRUCTION/ OPERATION [L8, LF] 01–14A–5
QUICK RELEASE CONNECTOR FUNCTION [L8, LF] 01–14A–5
QUICK RELEASE CONNECTOR CONSTRUCTION/OPERATION [L8, LF] 01–14A–5
FUEL INJECTOR FUNCTION [L8, LF] . . 01–14A–7
FUEL INJECTOR CONSTRUCTION/ OPERATION [L8, LF] 01–14A–7
FUEL PUMP RELAY FUNCTION [L8, LF] 01–14A–8

FUEL SYSTEM OUTLINE [L8, LF]

DPE011400000T01

Features

Improved serviceability	• Nylon tubes adopted for fuel hoses in the engine compartment and around the fuel tank, and quick release connectors adopted for joints
Reduction of evaporative gas	• Returnless fuel system adopted

Specification

Item		Specification
Injector	Type	Hi-ohmic
	Type of fuel delivery	Top-feed
	Type of drive	Voltage
Pressure regulator control pressure (kPa {kgf/cm^2, psi})		Approx. 390 {3.98, 56.6}
Fuel pump type		Electric
Fuel tank capacity (L {US gal, Imp gal})		60 {16, 13}
Fuel type		Premium unleaded fuel {Research octane number is 95 or more (conforming to EN228}*1}*2, Regular unleaded fuel (Research octane number is 91)*3, Regular unleaded fuel (Research octane number is 90 or more)*4

*1 : Europe specs.
*2 : European countries, Israel, Cyprus, Singapore, Brunei, Trinidad and Tobago, China (Hong Kong, Macao), Honduras, Panama, Nicaragua, Lebanon, El Salvador, Morocco, Taiwan, Indonesia, Guadeloup, French Guiana, Reunion, Canary Islands, New Caledonia, Turkey, Martinique
*3 : Peru
*4 : Chile, Costa Rica, The Philippines, Guatemala, Venezuela

FUEL SYSTEM STRUCTURAL VIEW [L8, LF]

DPE011400000T02

Engine Compartment Side

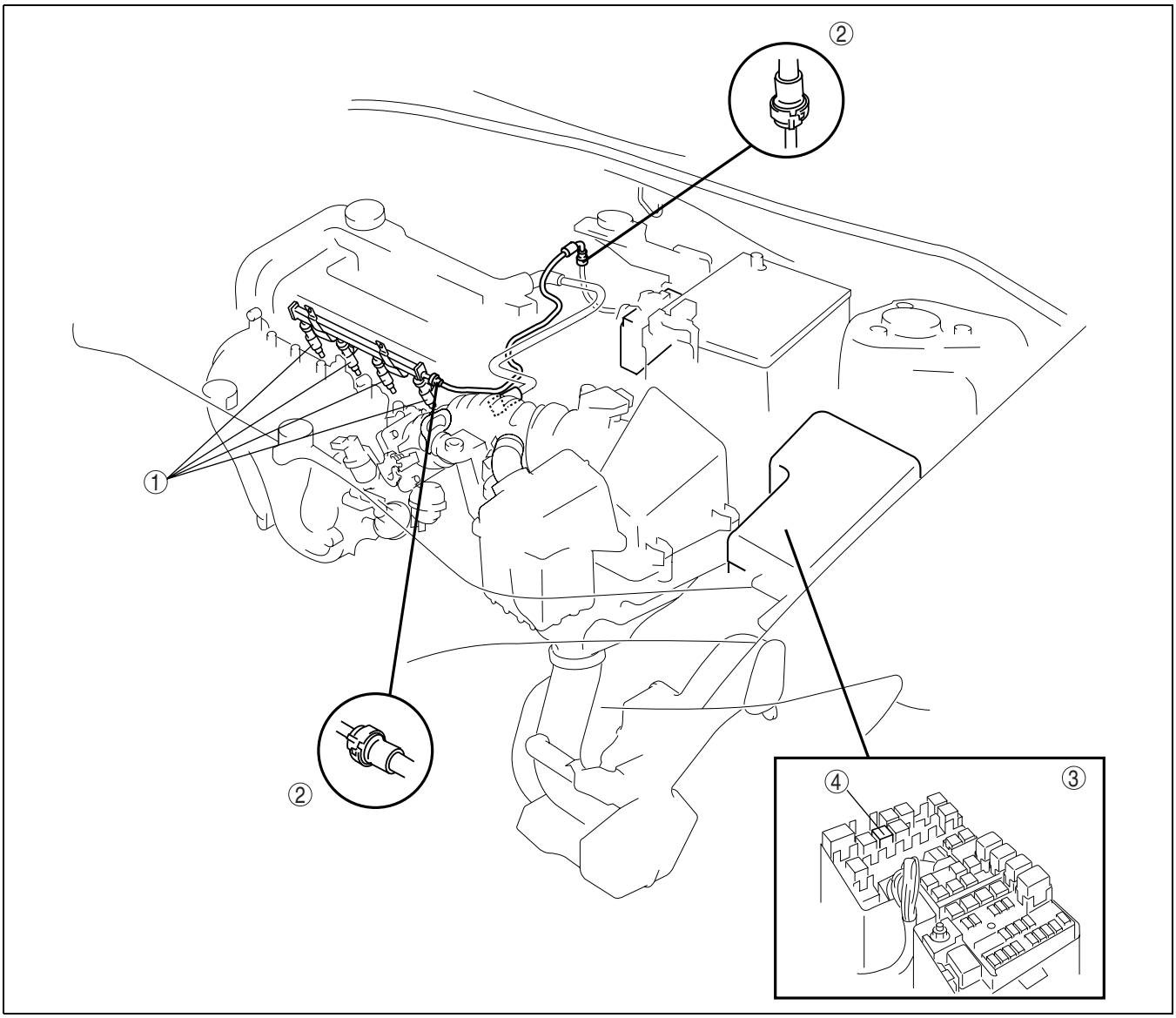

DPE0114ZT2001

1	Fuel injector
2	Quick release connector

3	Main fuse block
4	Fuel pump relay

Fuel Tank Side

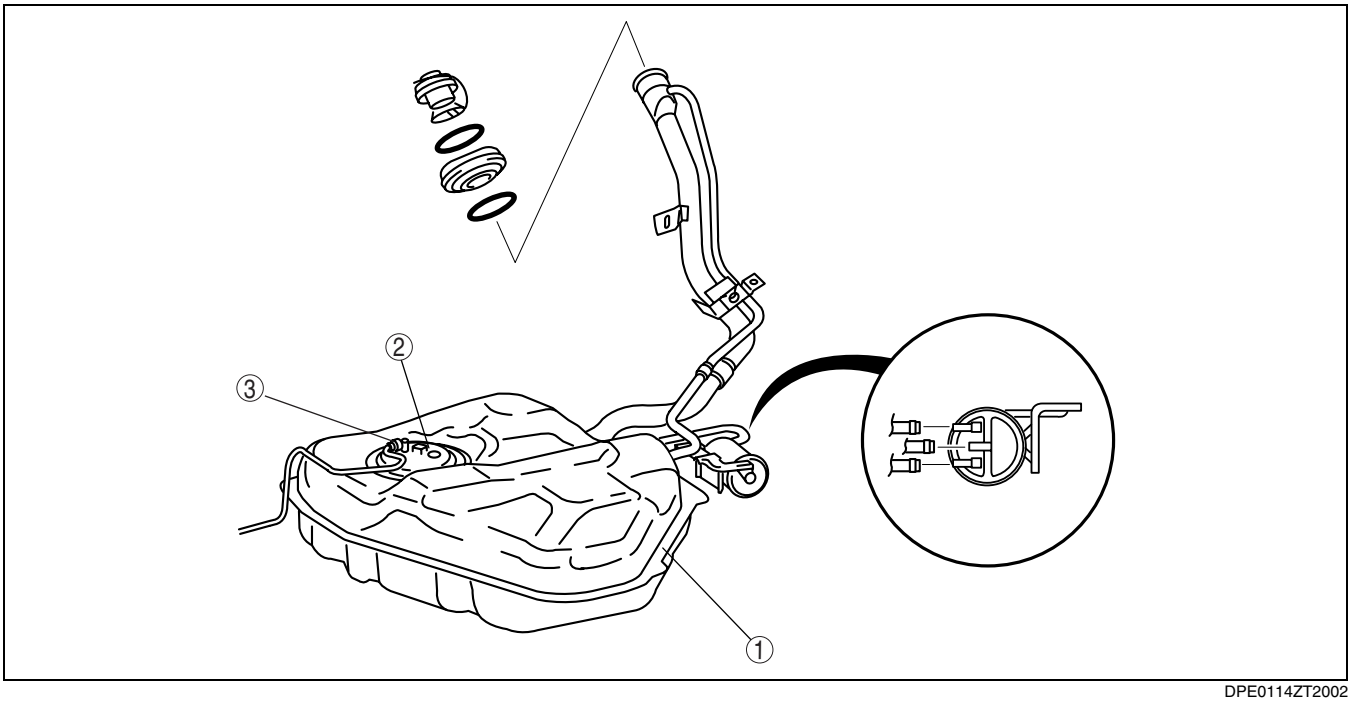

DPE0114ZT2002

1	Fuel tank
2	Fuel pump unit
3	Quick release connector

FUEL SYSTEM FLOW DIAGRAM [L8, LF]

DPE011400000T03

Fuel Flow

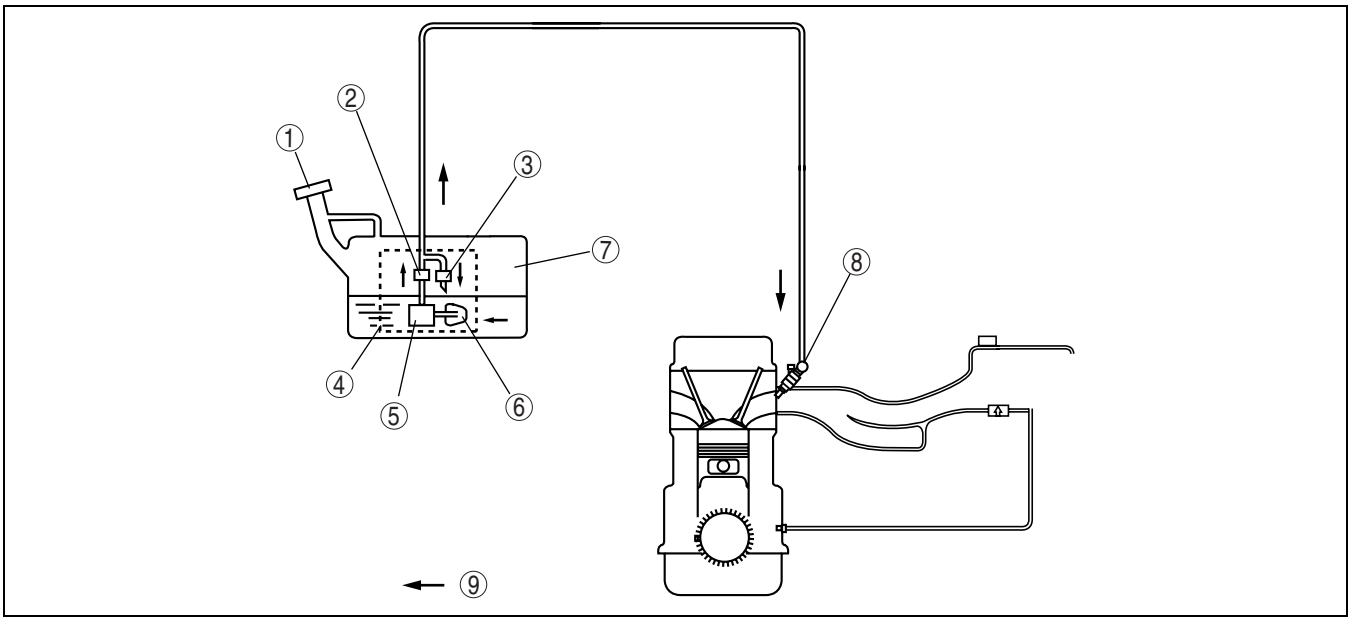

DPE0114ZT2004

1	Fuel-filler cap
2	Fuel filter (high-pressure)
3	Pressure regulator
4	Fuel pump unit
5	Fuel pump
6	Fuel filter (low-pressure)
7	Fuel tank
8	Fuel injector
9	Fuel flow

RETURNLESS FUEL SYSTEM OUTLINE [L8, LF]

DPE011400000T04

Features

- The returnless fuel system reduces fuel evaporation in the fuel tank.
- The pressure regulator located in the fuel tank prevents fuel return from the engine compartment side, thereby maintaining a low fuel temperature in the fuel tank. Due to this, formation of evaporative gas produced by a rise in fuel temperature is suppressed.
- The pressure regulator is built into the fuel pump unit in the fuel tank.

RETURNLESS FUEL SYSTEM OPERATION [L8, LF]

DPE011400000T05

- Fuel in the fuel tank is pumped out through the fuel filter (low-pressure) by the fuel pump, filtered by the fuel filter (high-pressure), and then regulated to a specified pressure by the pressure regulator.
- The pressure regulated fuel is sent to the fuel injectors.
- After pressure regulation, unnecessary fuel is returned from the pressure regulator to inside the fuel pump unit.

FUEL TANK CONSTRUCTION [L8, LF]

DPE011442110T01

- Capacity is **60 L {16 US gal, 13 Imp gal}**.
- Two rollover valves that include check valves (two-way) are built-in. For the rollover valve, refer to the emission system.
- Made of hard plastic for weight reduction.

NONRETURN VALVE FUNCTION [L8, LF]

DPE011442270T01

- Prevents fuel from spouting out due to evaporative gas pressure in the fuel tank when removing the fuel-filler cap.

NONRETURN VALVE CONSTRUCTION/OPERATION [L8, LF]

DPE011442270T02

- A single valve type has been adopted.

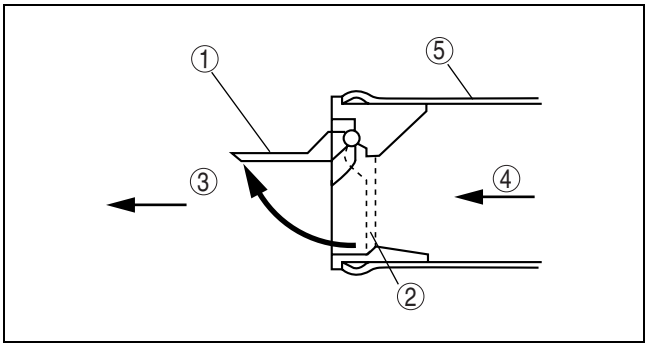

B3E0114T005

1	Valve position during refueling
2	Normal valve position
3	Fuel tank side
4	Fuel
5	Fuel-filler pipe

- Installed on the fuel tank side of the fuel-filler pipe.
- Under normal conditions, this valve is closed as shown by the dotted line. When refueling, it opens to the position shown by the solid line due to the flow of fuel. When refueling is finished, the valve returns to the normal valve position due to spring force.

FUEL PUMP UNIT FUNCTION [L8, LF]

DPE011413350T01

- The fuel pump suctions fuel from the fuel tank and pumps it to the fuel distributor.

FUEL PUMP UNIT CONSTRUCTION/OPERATION [L8, LF]

DPE011413350T02

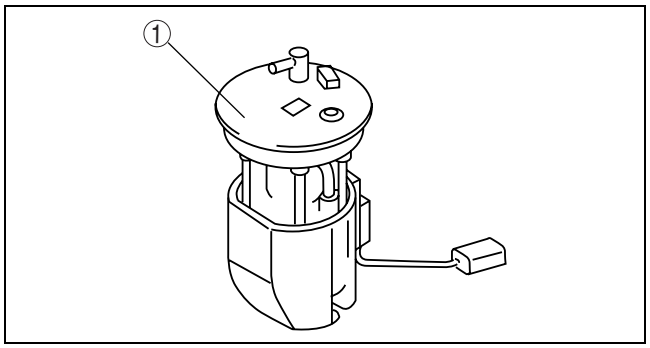

DPF0114ZT2003

1	Fuel pump unit

Fuel Pump Unit

- Mainly consists of a fuel filter (high-pressure), pressure regulator, fuel pump, fuel reserve cup, and fuel filter (low-pressure).
- A pressure regulator is built-in due to the adoption of a returnless fuel system.
- A hard-plastic fuel pump unit, with an integrated fuel filter (high-pressure) and fuel pump, has been adopted to simplify the fuel line.
- Fuel in the fuel reserve cup is suctioned out through the fuel filter (low-pressure) by the fuel pump, and pumped to the fuel filter (high-pressure). Return fuel is sent back to the fuel reserve cup or the fuel tank through the jet pump.
- If return fuel pressure exceeds the specified value, the relief valve discharges return fuel into the fuel pump unit without passing it through the venturi. Due to this, return fuel pressure is maintained below the specified value.

Pressure Regulator

- Built into the fuel pump unit due to adoption of a returnless fuel system.
- Mainly consists of a spring, release valve and diaphragm.
- Pressurizes fuel discharged by the fuel pump to **approx. 390 kPa {3.98 kgf/cm^2, 56.6 psi}** using the spring, diaphragm and release valve, and then pumps it to the fuel distributor.
- If fuel pressure exceeds **approx. 390 kPa {3.98 kgf/cm^2, 56.6 psi}**, the release valve opens to discharge unnecessary fuel pressure.

QUICK RELEASE CONNECTOR FUNCTION [L8, LF]

DPE011442692T01

- Quick release connectors that can be easily connected/disconnected have been adopted to improve serviceability.

QUICK RELEASE CONNECTOR CONSTRUCTION/OPERATION [L8, LF]

DPE011442692T02

- There are two types of quick release connectors.

Quick release connector locations

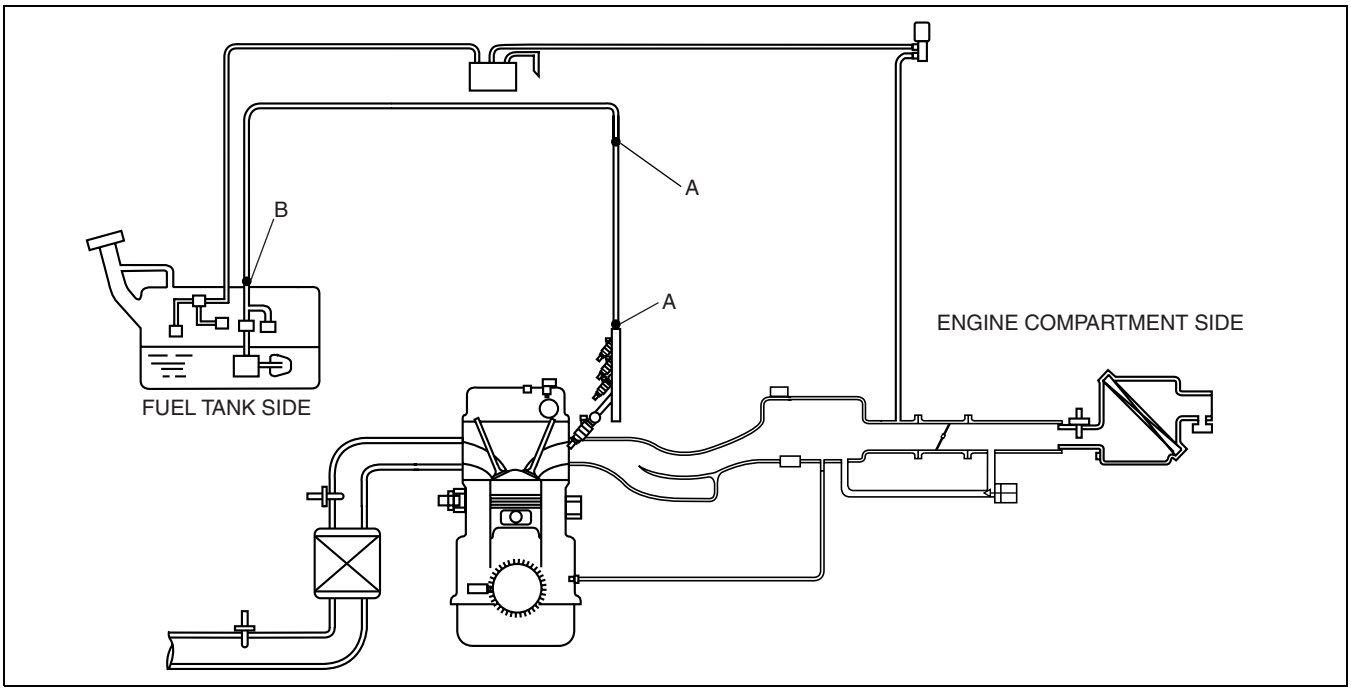

DPE0114ZW201

1	Engine compartment side

2	Fuel tank side

Type A

- Used on the fuel tank side of the charcoal canister and in the engine compartment.
- An **SST** is not used with this type.
- Mainly consists of a retainer and O-ring. The quick release connector is integrated with the fuel hose and therefore cannot be disassembled.
- When the quick release connector is connected, the fuel pipe projection is locked at the clamp lock point. By pushing the clamp release tab to expand the clamp, the lock point is released allowing the fuel pipe to be disconnected.

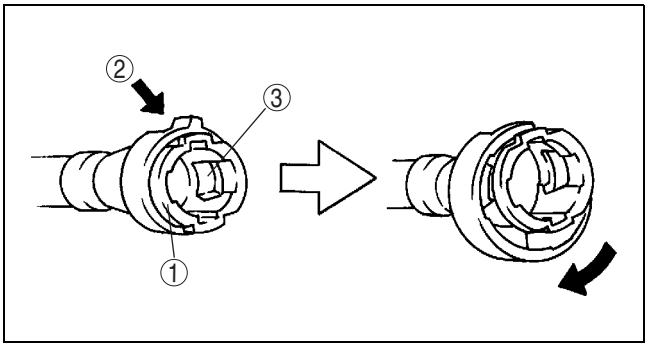

B3E0114T009

1	Quick release connector
2	Release tab
3	Lock point

- To connect the quick release connector properly, push it into the fuel pipe until a locking click sound is heard.

- New quick release connectors are fitted with a checker tab that prevents improper fit. This checker tab cannot normally be removed. When the quick release connector is properly connected to the fuel pipe, the lock is released and the checker tab comes off. Due to this, it can be verified that the quick release connector is completely connected.

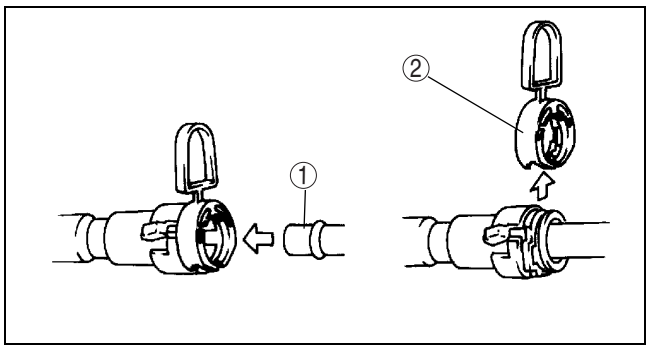

B3E0114T010

1	Fuel pipe
2	Checker tab

Type B

- The connector can be disconnected by pinching the retainer tab with the **SST** and pulling the connector.
- To connect the quick release connector properly, push it into the fuel pipe until a locking click sound is heard

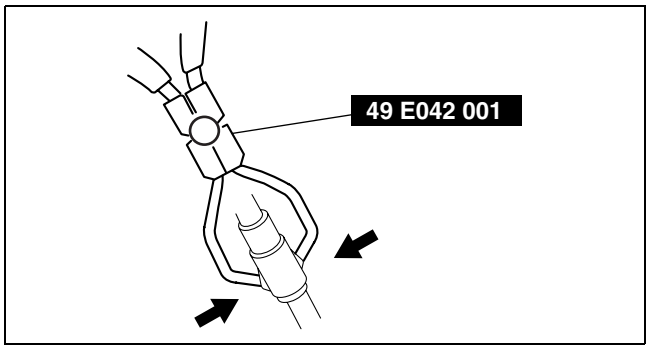

CPJ114ZWB881

- New quick release connectors are fitted with a checker tab that prevents improper fit. This checker tab cannot normally be removed. When the quick release connector is properly connected to the fuel pipe, the lock is released and the checker tab comes off. Due to this, it can be verified that the quick release connector is completely connected.

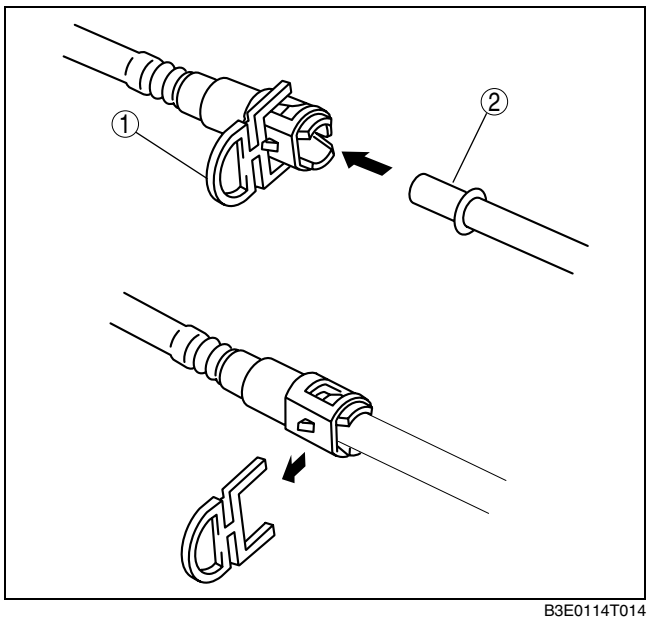

B3E0114T014

1	Checker tab
2	Fuel pipe

FUEL INJECTOR FUNCTION [L8, LF]

DPE011413250T01

- Injects fuel according to fuel injector control signals from the PCM.

FUEL INJECTOR CONSTRUCTION/OPERATION [L8, LF]

DPE011413250T02

- Installed on the cylinder head.
- Mainly consists of a coil, spring, needle valve and ball.
- A signal is sent from the PCM causing exciting current passes through the coil and thereby pulling in the needle valve. Since the ball that opens and closes the injection opening is integrated with the needle valve, it is pulled

together with the needle valve and fuel is injected.
- The amount of injection is determined by the open time of the needle valve (equal to the energization time of the coil).

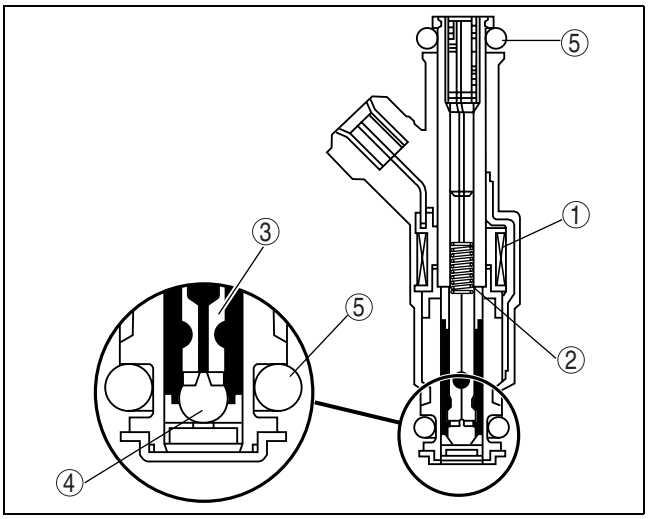

B3E0114T007

1	Coil
2	Spring
3	Needle valve
4	Ball
5	O-ring

FUEL PUMP RELAY FUNCTION [L8, LF]

DPE011400000T06

- Controls the fuel pump on/off according to control signals from the PCM.

01–15A EXHAUST SYSTEM [L8, LF]

EXHAUST SYSTEM OUTLINE [L8, LF] 01–15A–1
EXHAUST SYSTEM STRUCTURAL VIEW [L8, LF] 01–15A–1

EXHAUST SYSTEM OUTLINE [L8, LF]

DPE011500000T01

Features

- The exhaust piping is shorter due to the placement of the exhaust manifold at the rear of the engine for improved exhaust performance. Moreover, due to the shorter distance to the catalytic converter, temperature decrease of exhaust emission is prevented and catalyst is more efficient.

EXHAUST SYSTEM STRUCTURAL VIEW [L8, LF]

DPE011500000T02

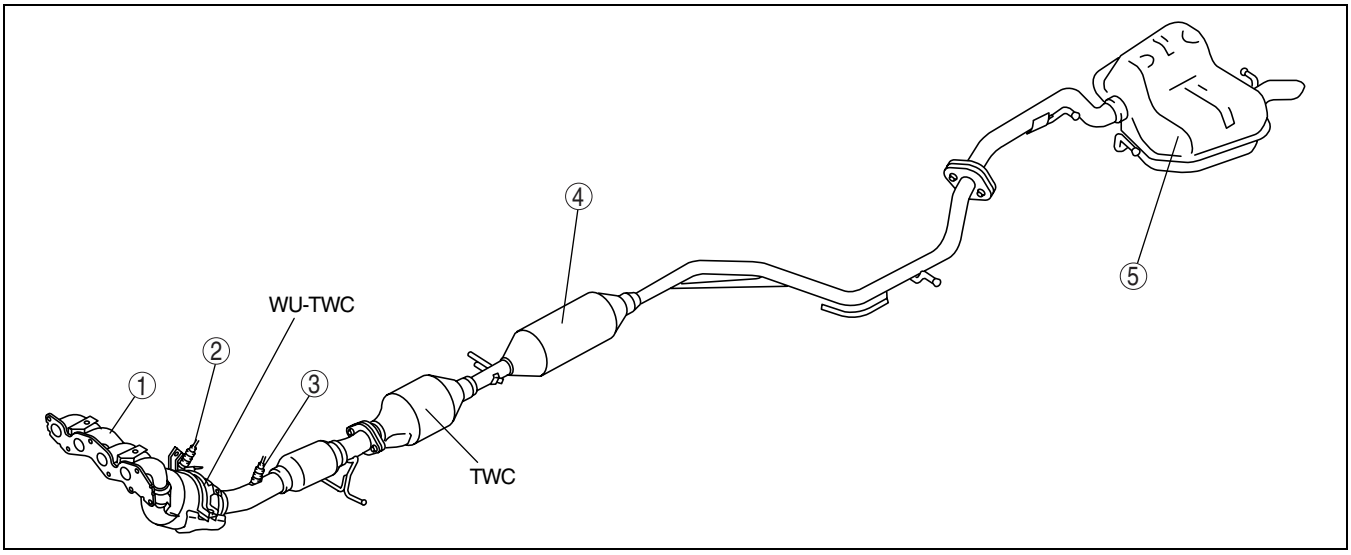

DPE0115ZT2001

1	Exhaust manifold
2	Front HO2S
3	Rear HO2S

4	Pre-silencer
5	Main silencer

01–16A EMISSION SYSTEM [L8, LF]

EMISSION SYSTEM OUTLINE [L8, LF] 01–16A–1
EMISSION SYSTEM STRUCTURAL VIEW [L8, LF] 01–16A–2
EXHAUST PURIFICATION SYSTEM OUTLINE [L8, LF] 01–16A–2
EGR SYSTEM OUTLINE [L8, LF]. 01–16A–3
EGR SYSTEM STRUCTURE [L8, LF] . . 01–16A–3
EGR SYSTEM OPERATION [L8, LF] . . . 01–16A–3
EGR VALVE FUNCTION [L8, LF] 01–16A–3
EGR VALVE CONSTRUCTION/OPERATION [L8, LF] 01–16A–4
CATALYTIC CONVERTER SYSTEM OUTLINE [L8, LF] 01–16A–4
CATALYTIC CONVERTER SYSTEM STRUCTURE [L8, LF]. 01–16A–4
CATALYTIC CONVERTER SYSTEM OPERATION [L8, LF] 01–16A–4
POSITIVE CRANKCASE VENTILATION (PCV) SYSTEM OUTLINE [L8, LF] 01–16A–4
POSITIVE CRANKCASE VENTILATION (PCV) SYSTEM STRUCTURE [L8, LF] 01–16A–5
POSITIVE CRANKCASE VENTILATION (PCV) SYSTEM OPERATION [L8, LF] 01–16A–5
POSITIVE CRANKCASE VENTILATION (PCV) VALVE FUNCTION [L8, LF] 01–16A–5
POSITIVE CRANKCASE VENTILATION (PCV) VALVE CONSTRUCTION [L8, LF] 01–16A–5
EVAPORATIVE EMISSION (EVAP) CONTROL SYSTEM OUTLINE [L8, LF] 01–16A–6
EVAPORATIVE EMISSION (EVAP) CONTROL SYSTEM STRUCTURE [L8, LF] 01–16A–6
EVAPORATIVE EMISSION (EVAP) CONTROL SYSTEM OPERATION [L8, LF] 01–16A–6
PURGE SOLENOID VALVE FUNCTION [L8, LF] 01–16A–6
PURGE SOLENOID VALVE CONSTRUCTION/ OPERATION [L8, LF] 01–16A–7
EVAPORATIVE EMISSION (EVAP) CONTROL SYSTEM OUTLINE [L8, LF]. 01–16A–7
FUEL-FILLER CAP FUNCTION [L8, LF]. 01–16A–7
FUEL-FILLER CAP CONSTRUCTION/ OPERATION [L8, LF] 01–16A–7
ROLLOVER VALVE FUNCTION [L8, LF] 01–16A–8
ROLLOVER VALVE CONSTRUCTION/ OPERATION [L8, LF] 01–16A–8
CHARCOAL CANISTER FUNCTION [L8, LF] 01–16A–8
CHARCOAL CANISTER CONSTRUCTION/ OPERATION [L8, LF] 01–16A–8
EVAPORATIVE CHAMBER FUNCTION [L8, LF] 01–16A–9
EVAPORATIVE CHAMBER CONSTRUCTION/ OPERATIN [L8, LF] 01–16A–9
CHECK VALVE (TWO-WAY) FUNCTION [L8, LF] 01–16A–9
CHECK VALVE (TWO-WAY) CONSTRUCTION/ OPERATION [L8, LF] 01–16A–9

EMISSION SYSTEM OUTLINE [L8, LF]

DPE011600000T01

Feature

Improved exhaust gas purification	• Exhaust gas recirculation (EGR) system adopted • Catalytic converter system adopted

Specification

Item	Specification
EGR type	Stepping motor
Catalyst form	WU-TWC (monolith) TWC (monolith)
Evaporative emission (EVAP) control system	Charcoal canister type
Positive crankcase ventilation (PCV) system	Closed type

EMISSION SYSTEM STRUCTURAL VIEW [L8, LF]

DPE011600000T02

Engine Compartment Side

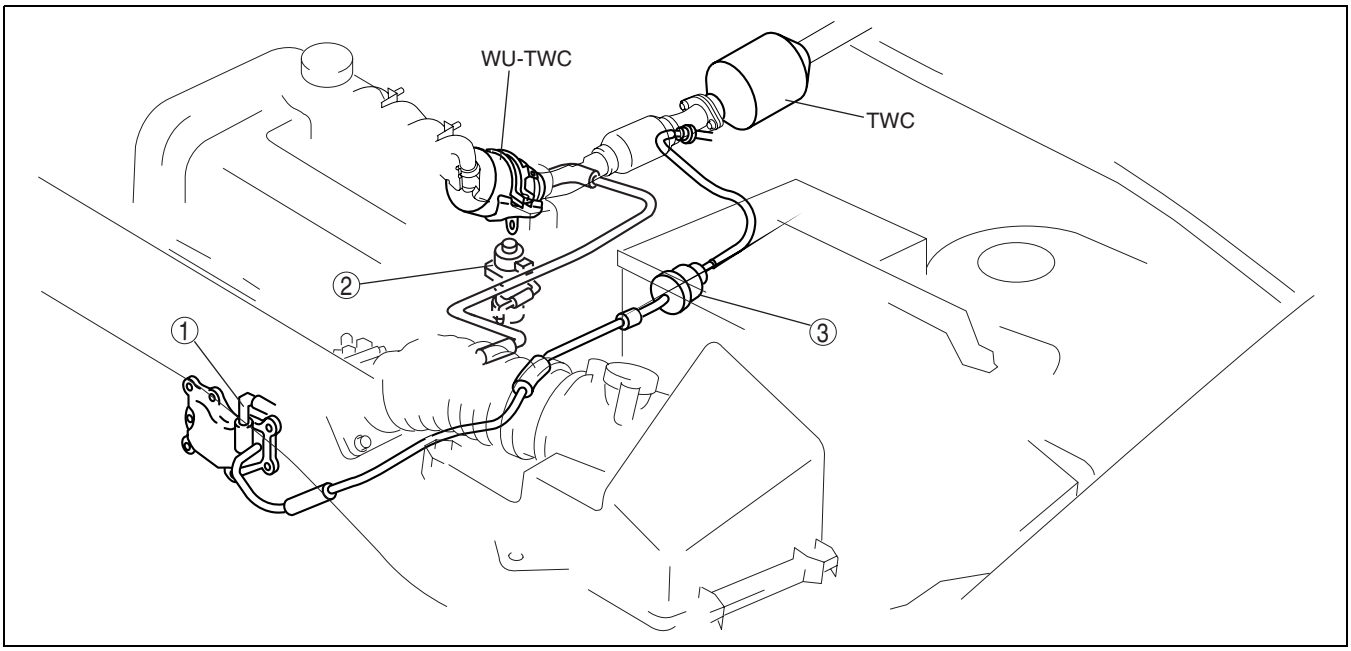

DPE116AT2601

1	Positive crankcase ventilation (PCV) valve
2	EGR valve
3	Purge solenoid valve

Fuel Tank Side

1	Fuel-filler cap
2	Charcoal canister
3	Evaporative chamber
4	Check valve (two-way)
5	Rollover valve

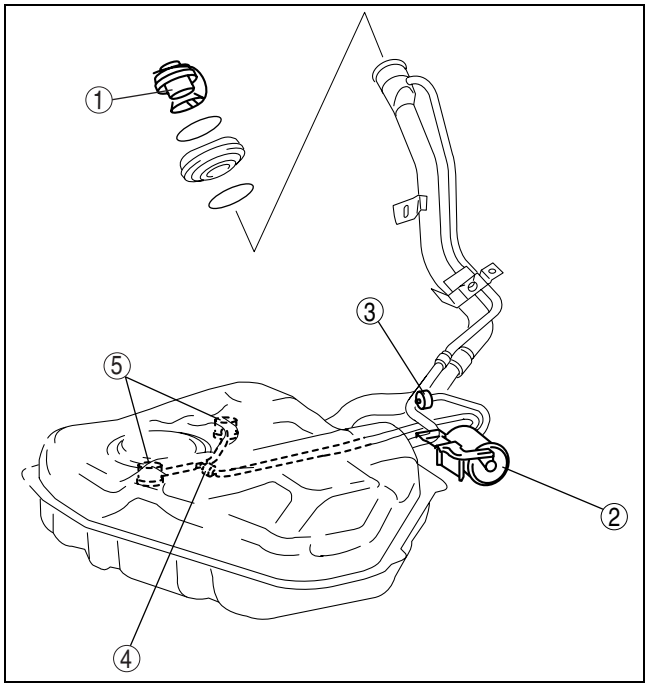

DPE0116ZT2001

EXHAUST PURIFICATION SYSTEM OUTLINE [L8, LF]

DPE011600010T01

Feature

- The EGI system (fuel injection control, ignition control) burns fuel supplied to the engine at the theoretical air/fuel ratio for improved purification efficiency of the catalytic converter system.

EGR SYSTEM OUTLINE [L8, LF]

DPE011600020T01

Features

- An EGR valve with a stepping motor has been adopted for optimum control according to engine operation conditions.
- For control of EGR system, refer to CONTROL SYSTEM, EGR CONTROL. (See 01–40A–27 EGR CONTROL OUTLINE [L8, LF], 01–40A–28 EGR CONTROL BLOCK DIAGRAM [L8, LF], 01–40A–28 EGR CONTROL OPERATION [L8, LF].)

EGR SYSTEM STRUCTURE [L8, LF]

DPE011600020T02

- Consists of an EGR valve and EGR pipe to conduct exhaust gas to the intake air system.

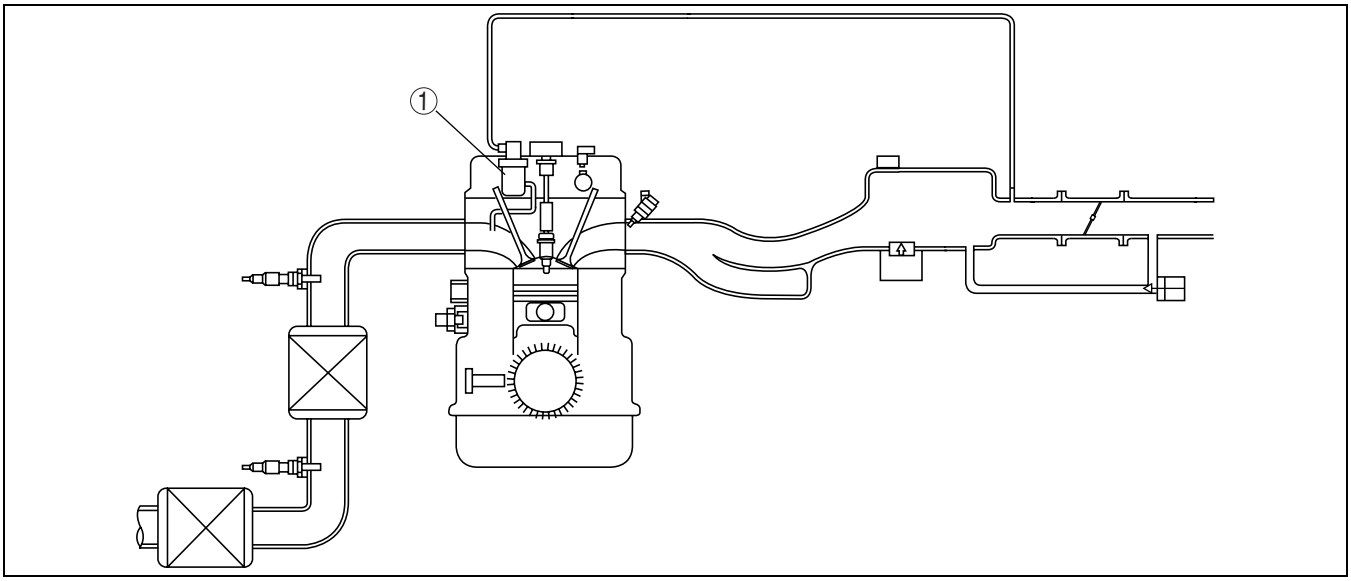

B3E0116T004

1	EGR valve

EGR SYSTEM OPERATION [L8, LF]

DPE011600020T03

- The high occurrence of NO_X at high temperatures has been reduced by recirculating exhaust gas to the combustion chamber in order to lower the combustion temperature.
- The exhaust gas flows along the EGR passage in the cylinder head and into the EGR valve. Exhaust gas that has flowed past the EGR valve flows through the EGR passage and EGR pipe, and is conducted to the intake manifold.

EGR VALVE FUNCTION [L8, LF]

DPE011620300T01

- Adjusts the amount of exhaust gas to be recirculated from the exhaust system to the combustion chamber based on the EGR control signal from the PCM.

EGR VALVE CONSTRUCTION/OPERATION [L8, LF]

DPE011620300T02

- Consists of a rotor, coils, and a spring.

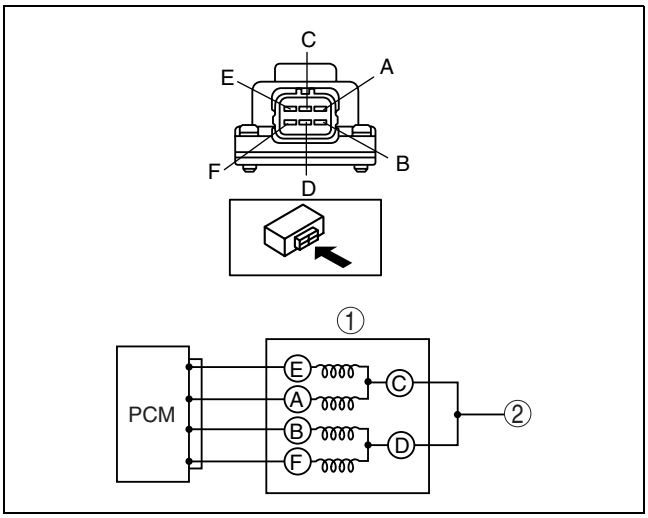

DPE116AT2602

1	EGR valve
2	Main relay

- Operates based on the signal from the PCM to drive the EGR valve stepping motor.
- The PCM determines the optimum EGR valve opening angle based on the engine speed and intake air amount when the engine is completely warmed up and drives the EGR valve.

CATALYTIC CONVERTER SYSTEM OUTLINE [L8, LF]

DPE011600050T01

Feature

- Purifies contaminants in the exhaust gas by utilizing a chemical reaction in a three way catalytic converter.

CATALYTIC CONVERTER SYSTEM STRUCTURE [L8, LF]

DPE011600050T02

- Consists of a three way catalytic converter and insulator.
- A catalytic converter utilizing a platinum—palladium—rhodium system has been adopted.

System diagram

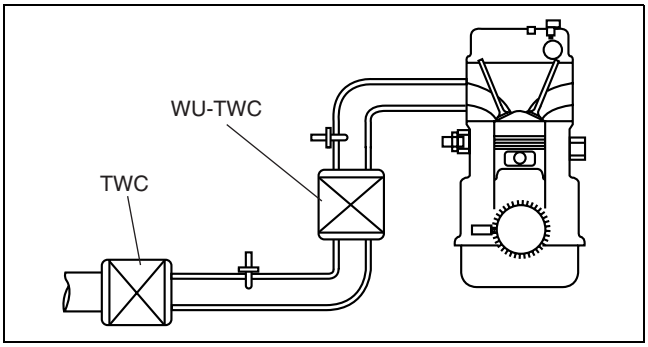

DPE116AT2603

CATALYTIC CONVERTER SYSTEM OPERATION [L8, LF]

DPE011600050T03

- Contaminants in the exhaust gas (HC, CO, NO_X) are purified by oxidization and deoxidization while passing through the catalytic converter.
  - — Oxidization process
    - Noxious HC (hydrocarbon) and CO (carbon monoxide) are bonded to oxygen which is converted to non-noxious carbon dioxide and water.
      $O_2 + HC + CO \rightarrow CO_2 + H_2O$
  - — Deoxidization process
    - Noxious NO_X (nitrogen oxide) is converted to non-noxious nitrogen and oxygen. A part of the oxygen generated at this time is used in the oxidization process.
      $NO_X \rightarrow N_2 + O_2$

POSITIVE CRANKCASE VENTILATION (PCV) SYSTEM OUTLINE [L8, LF]

DPE011600040T01

Feature

- A closed type PCV system has been adopted.

POSITIVE CRANKCASE VENTILATION (PCV) SYSTEM STRUCTURE [L8, LF]

DPE011600040T02

- Consists of a PCV valve and ventilation hose.
- The PCV valve is installed on the oil separator.

System diagram

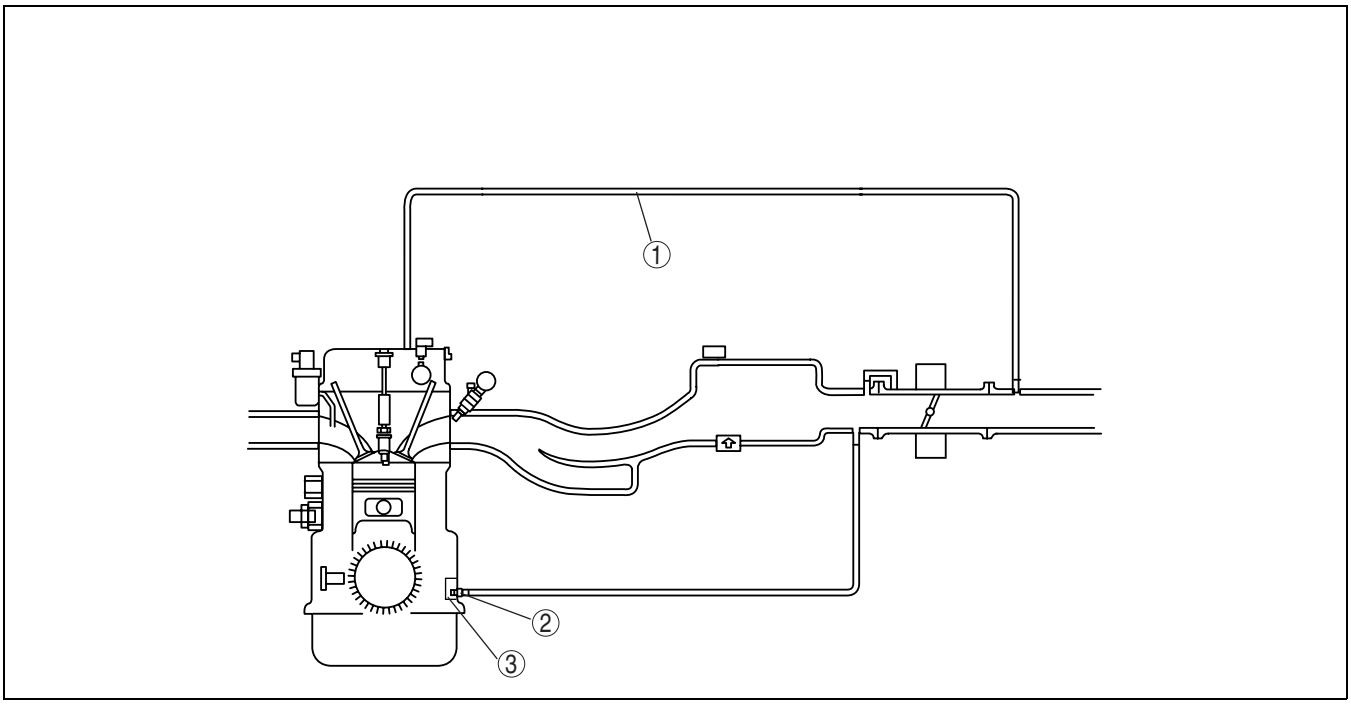

B3E0116T009

1	Ventilation hose
2	PCV valve
3	Oil separator

POSITIVE CRANKCASE VENTILATION (PCV) SYSTEM OPERATION [L8, LF]

DPE011600040T03

- Blowby gas (unburnt gas), including CO and HC exhausted from the crankcase, is forced into the intake air system and burned in the combustion chamber to prevent its atmospheric release.

POSITIVE CRANKCASE VENTILATION (PCV) VALVE FUNCTION [L8, LF]

DPE011613890T01

- Adjusts the amount of blowby gas conducted to the intake air system according to the intake manifold vacuum.
- Regulates the air (including blowby gas) passing from the cylinder head cover to intake manifold during low load (when vacuum in the intake manifold is high) to ensure an optimum air/fuel ratio.

POSITIVE CRANKCASE VENTILATION (PCV) VALVE CONSTRUCTION [L8, LF]

DPE011613890T02

- Consists of a spring and valves.
- The PCV valve ensures the passage of blowby gas by opening the valve according to the intake manifold vacuum, and adjusts the amount of gas by spring force.

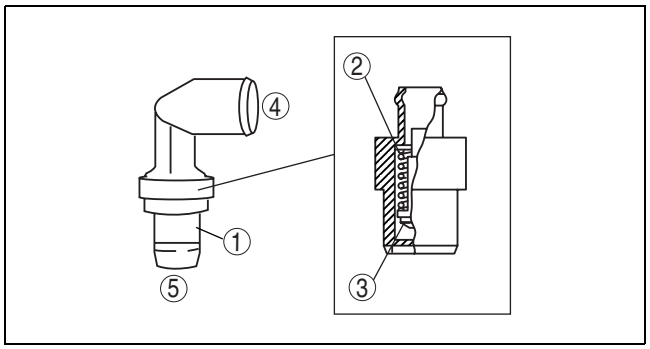

DPE0116ZT2004

1	PCV valve
2	Spring
3	Internal valve
4	To intake manifold

5	From oil separator

EVAPORATIVE EMISSION (EVAP) CONTROL SYSTEM OUTLINE [L8, LF]

DPE011600030T01

Features

- With the adoption of the charcoal canister, release of evaporative gas into the atmosphere has been prevented.
- A duty solenoid valve (purge control valve) has been adopted for optimum control according to engine operation conditions.
- For control of evaporative purge, refer to CONTROL SYSTEM, EVAPORATIVE PURGE CONTROL. (See 01–40A–30 PURGE CONTROL OUTLINE [L8, LF], 01–40A–30 PURGE CONTROL BLOCK DIAGRAM [L8, LF], 01–40A–30 PURGE CONTROL OPERATION [L8, LF].)

EVAPORATIVE EMISSION (EVAP) CONTROL SYSTEM STRUCTURE [L8, LF]

DPE011600030T02

- Consists of a purge solenoid valve, charcoal canister, rollover valve, and fuel-filler cap.

System diagram

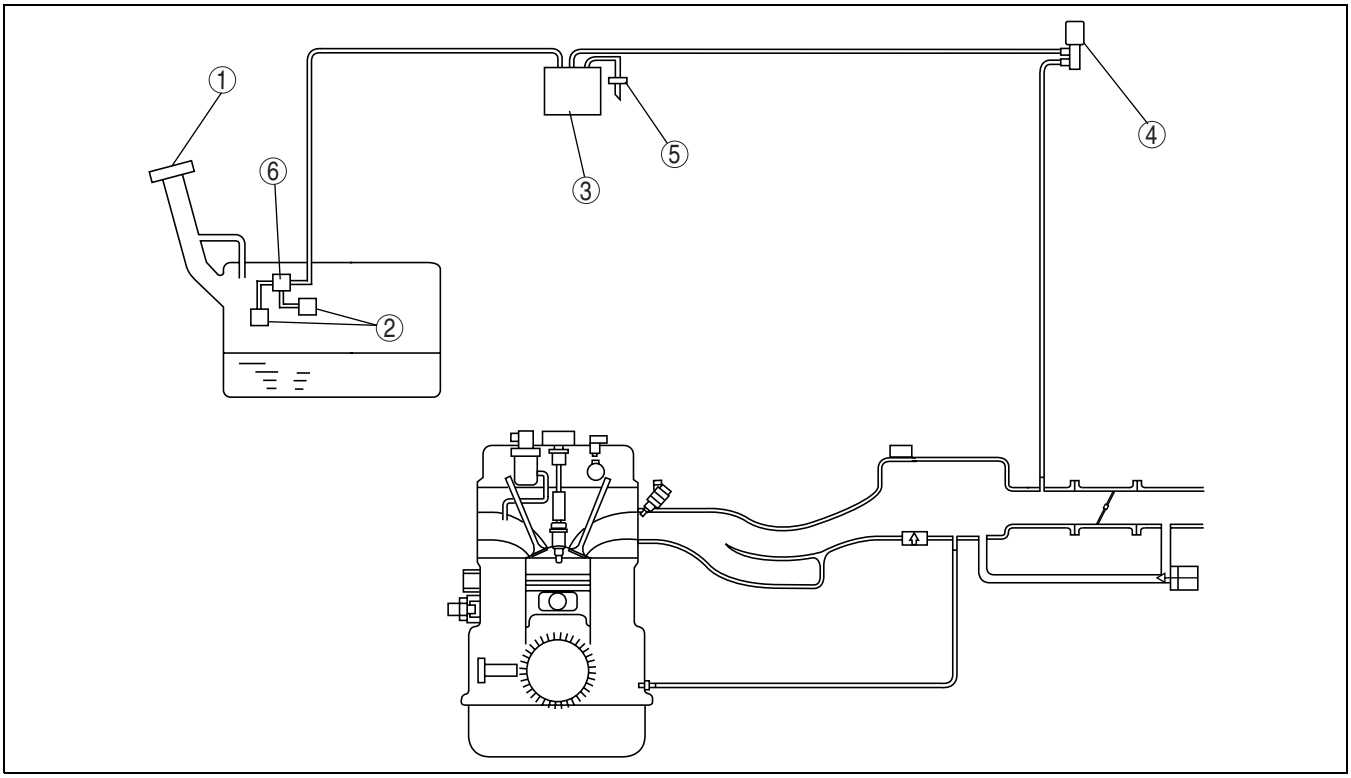

DPE0116ZT2003

1	Fuel-filler cap
2	Rollover valve
3	Charcoal canister

4	Purge solenoid valve
5	Evaporative chamber
6	Check valve (two-way)

EVAPORATIVE EMISSION (EVAP) CONTROL SYSTEM OPERATION [L8, LF]

DPE011600030T03

- When the engine is stopped, evaporative gas in the fuel tank flows out when the pressure increases and is absorbed by the charcoal canister.
- Evaporative gas that was absorbed by the charcoal canister passes through the solenoid valve together with air introduced from the charcoal canister orifice when the engine is running, and is fed to the engine according to engine operation conditions.
- If the pressure in the fuel tank decreases, air is introduced from the charcoal canister orifice through the rollover valve. If the charcoal canister orifice is clogged, the fuel-filler cap negative pressure valve opens and air is introduced to the fuel tank to prevent increased vacuum in the fuel tank, causing a load on the fuel tank.
- If there is a malfunction in the rollover valve, the fuel-filler cap positive pressure valve opens and evaporative gas is released into the atmosphere to prevent increased pressure in the fuel tank, causing a load on it.

PURGE SOLENOID VALVE FUNCTION [L8, LF]

DPE011618744T01

- Adjusts the amount of evaporative gas to be introduced to the intake air system.

PURGE SOLENOID VALVE CONSTRUCTION/OPERATION [L8, LF]

DPE011618744T02

- Installed on the water outlet case.
- Consists of a coil, spring and plunger.
- Opens and closes the passage in the solenoid valve according to the purge solenoid valve control signal (duty signal) from the PCM to control the amount of evaporative gas to be introduced to the intake manifold according to engine operation conditions.

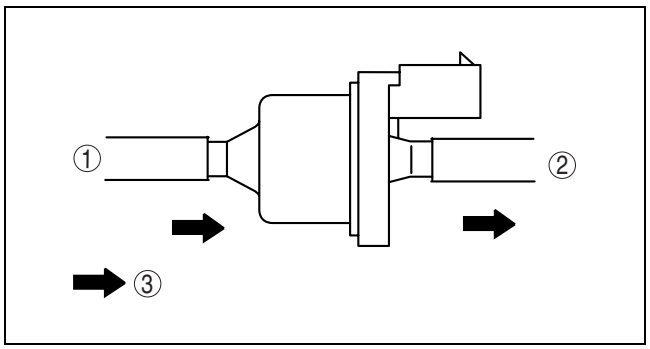

B3E0116T014

1	From charcoal canister
2	To intake manifold
3	Flow of evaporative gas

- The signal sent from the PCM energizes the coil and it becomes magnetized, pulling the plunger. The passage between the ports opens when the plunger is pulled, and evaporative gas is introduced to the intake air system according to intake manifold vacuum.

EVAPORATIVE EMISSION (EVAP) CONTROL SYSTEM OUTLINE [L8, LF]

DPE011618744T03

Features

- With the adoption of the charcoal canister, release of evaporative gas into the atmosphere has been prevented.
- A duty solenoid valve (purge control valve) has been adopted for optimum control according to engine operation conditions.
- For control of evaporative purge, refer to CONTROL SYSTEM, EVAPORATIVE PURGE CONTROL. (See 01–40A–30 PURGE CONTROL OUTLINE [L8, LF], 01–40A–30 PURGE CONTROL BLOCK DIAGRAM [L8, LF], 01–40A–30 PURGE CONTROL OPERATION [L8, LF].)

FUEL-FILLER CAP FUNCTION [L8, LF]

DPE011642250T01

- If the evaporative gas passage is closed for some reason, the fuel filler cap prevents the generation of positive or negative pressure in the fuel tank, protecting it from deformation.

FUEL-FILLER CAP CONSTRUCTION/OPERATION [L8, LF]

DPE011642250T02

- Consists of a positive pressure valve, negative pressure valve, spring, and O-ring.
- When there is positive pressure in the fuel tank due to evaporative gas, the evaporative gas is released into the atmosphere. When there is negative pressure, air is introduced to the fuel tank.
- The positive pressure valve and negative pressure valve opening pressures are higher than the check valve (two-way) built into the rollover valve, therefore the positive and negative pressure valves are normally not open.

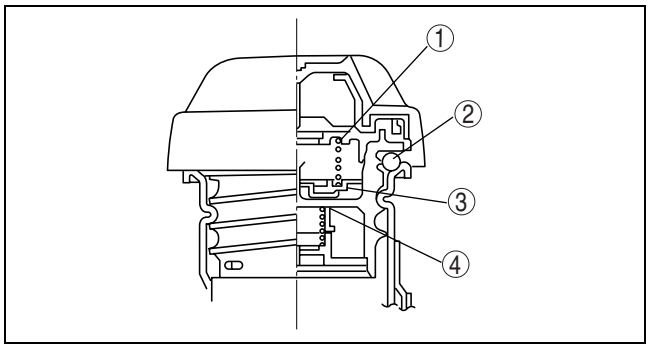

B3E0116T016

1	Spring
2	O-ring
3	Positive pressure valve
4	Negative pressure valve

ROLLOVER VALVE FUNCTION [L8, LF]

DPE011642720T01

- The rollover valve prevents fuel flow into the evaporative gas passage during sudden cornering or vehicle rollover.

ROLLOVER VALVE CONSTRUCTION/OPERATION [L8, LF]

DPE011642720T02

- The rollover valve cannot be removed or installed as it is built into the fuel tank.

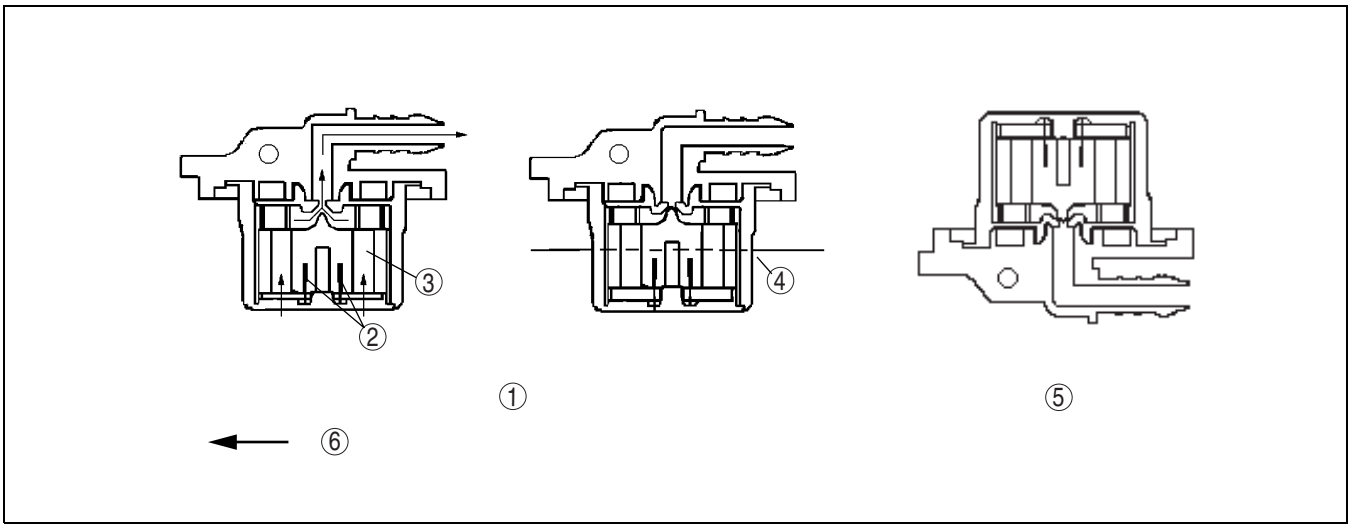

DPE0116ZT2005

1	Vehicle level
2	Spring
3	Float

4	Fuel level
5	Rotated 180°
6	Flow of evaporative gas

- The rollover valve consists of a float, and spring.
- The rollover valve utilizes a combination of float weight, spring force, and buoyancy. When the float is sunk in the fuel, the float (valve) closes to block the sealing surface of the passage.

CHARCOAL CANISTER FUNCTION [L8, LF]

DPE011613970T01

- The charcoal canister contains activated charcoal that temporarily absorbs evaporative gas.

CHARCOAL CANISTER CONSTRUCTION/OPERATION [L8, LF]

DPE011613970T02

- Installed under the fuel tank.
- During purge solenoid valve operation, atmosphere enters the charcoal canister from the atmospheric orifice to entirely flood the activated charcoal and release the evaporative gas.

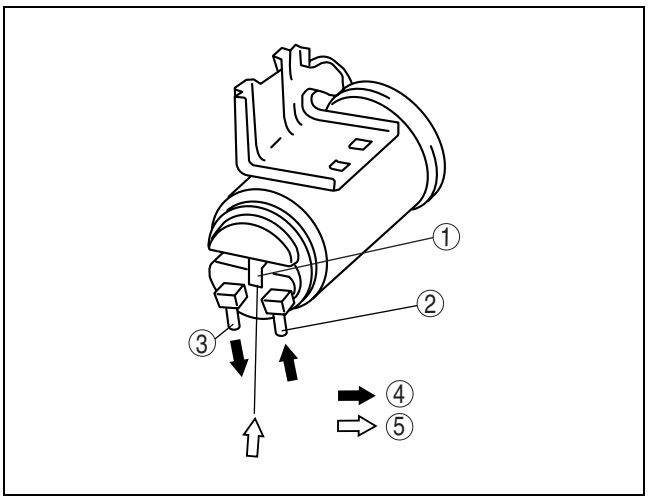

DPE0116ZT2002

1	Atmosphere
2	Fuel tank side
3	Purge solenoid valve side
4	Flow of evaporative gas
5	Flow of atmosphere

EVAPORATIVE CHAMBER FUNCTION [L8, LF]

DPE011642590T03

- The evaporative chamber prevents penetration of water and dust in the charcoal canister.

EVAPORATIVE CHAMBER CONSTRUCTION/OPERATIN [L8, LF]

DPE011642590T04

- A small section with partitions is located in the evaporative chamber. These partitions protect the charcoal canister by preventing flooding as atmospheric air enters from the airflow holes.

1	To charcoal canister
2	To atmosphere

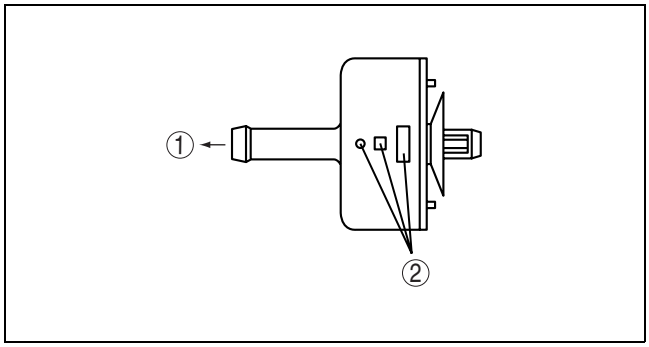

DPE116BT1011

CHECK VALVE (TWO-WAY) FUNCTION [L8, LF]

DPE011642913T03

- The check valve maintain the pressure in the fuel tank at constant pressure.

CHECK VALVE (TWO-WAY) CONSTRUCTION/OPERATION [L8, LF]

DPE011642913T04

- The check valve (two-way) cannot be removed as it is built into the fuel tank.
- Mainly consists of positive and negative pressure valves.
- The valve moves in response to the difference in air pressure between the fuel tank side and the atmospheric side, thereby changing the path of airflow.
- When the pressure in the fuel tank becomes negative due to fuel consumption or other factors, the air path opens, drawing atmospheric air into the fuel tank.

01–17A CHARGING SYSTEM [L8, LF]

CHARGING SYSTEM OUTLINE [L8, LF] 01–17A–1
CHARGING SYSTEM STRUCTURAL VIEW [L8, LF] 01–17A–1
BATTERY CONSTRUCTION [L8, LF] . . . 01–17A–1
GENERATOR CONSTRUCTION [L8, LF] 01–17A–2

CHARGING SYSTEM OUTLINE [L8, LF]

DPE011700000T01

Features

Improved reliability	• Battery duct adopted
Miniaturization	• Non-regulator type generator with built-in power transistor adopted

CHARGING SYSTEM STRUCTURAL VIEW [L8, LF]

DPE011700000T02

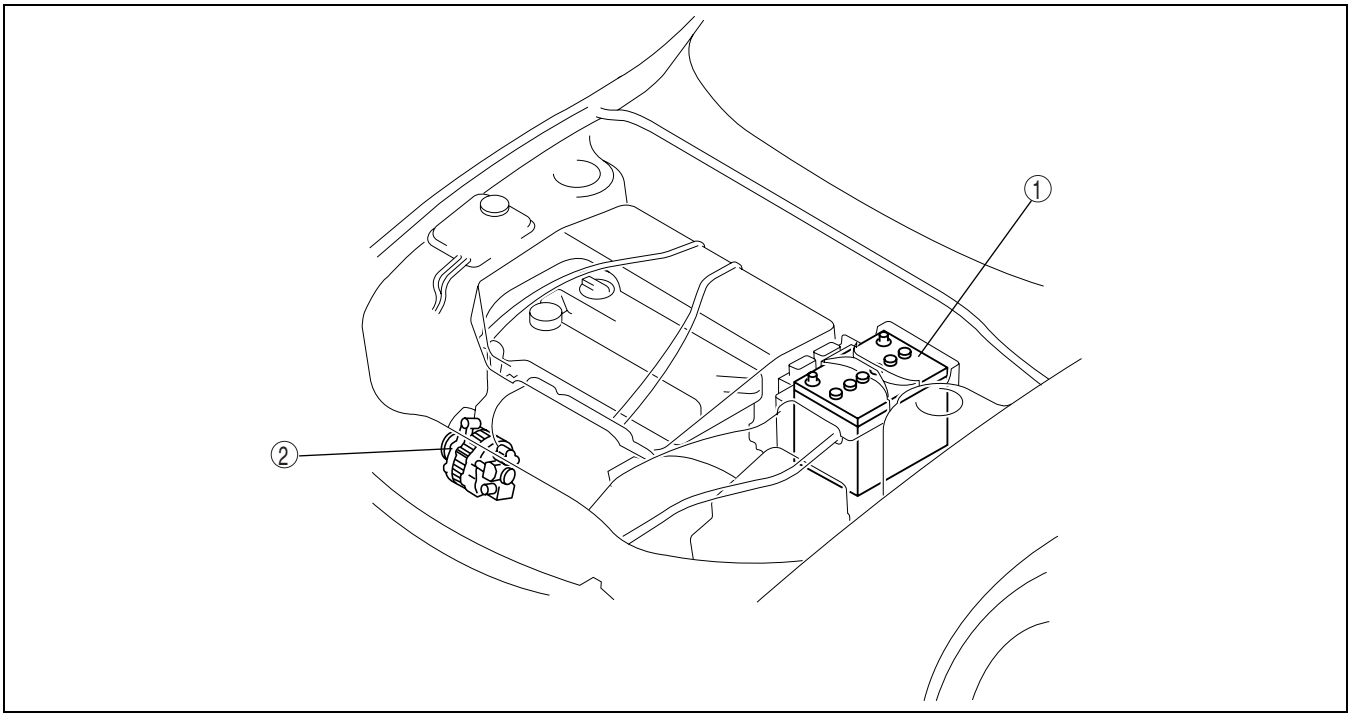

DPE117AT1001

1	Battery		2	Generator

BATTERY CONSTRUCTION [L8, LF]

DPE011718520T01

- Air that passes through the battery duct when the vehicle is moving is used to cool the battery, preventing battery degradation from the heat created through chemical reaction, improving reliability.

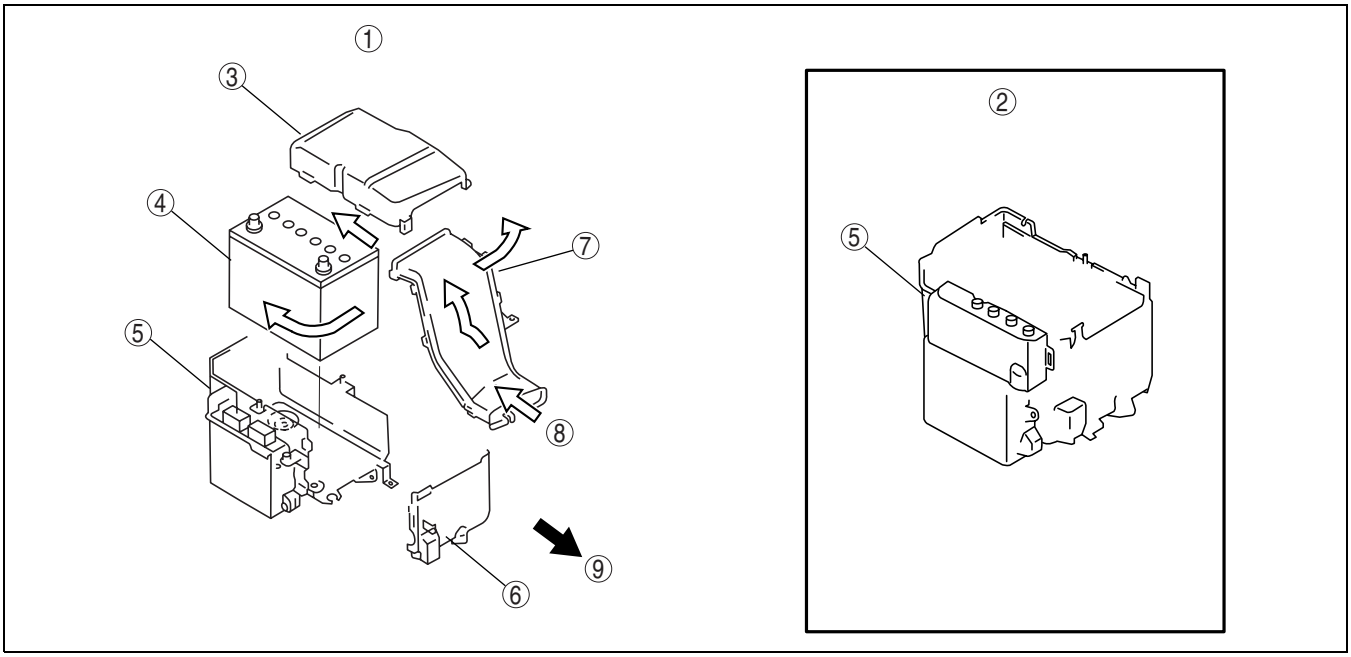

DPE117AT1002

1	Except U.K. Specs.
2	U.K. Specs.
3	Battery cover
4	Battery
5	Battery tray

6	Battery box
7	Battery duct
8	Intake air
9	Front

GENERATOR CONSTRUCTION [L8, LF]

DPE011718300T01

- With the elimination of the voltage regulator, generator control is carried out by the PCM. Exciting current in the field coil is increased or decreased by the duty signal from the PCM sent to the power transistor built into the generator.

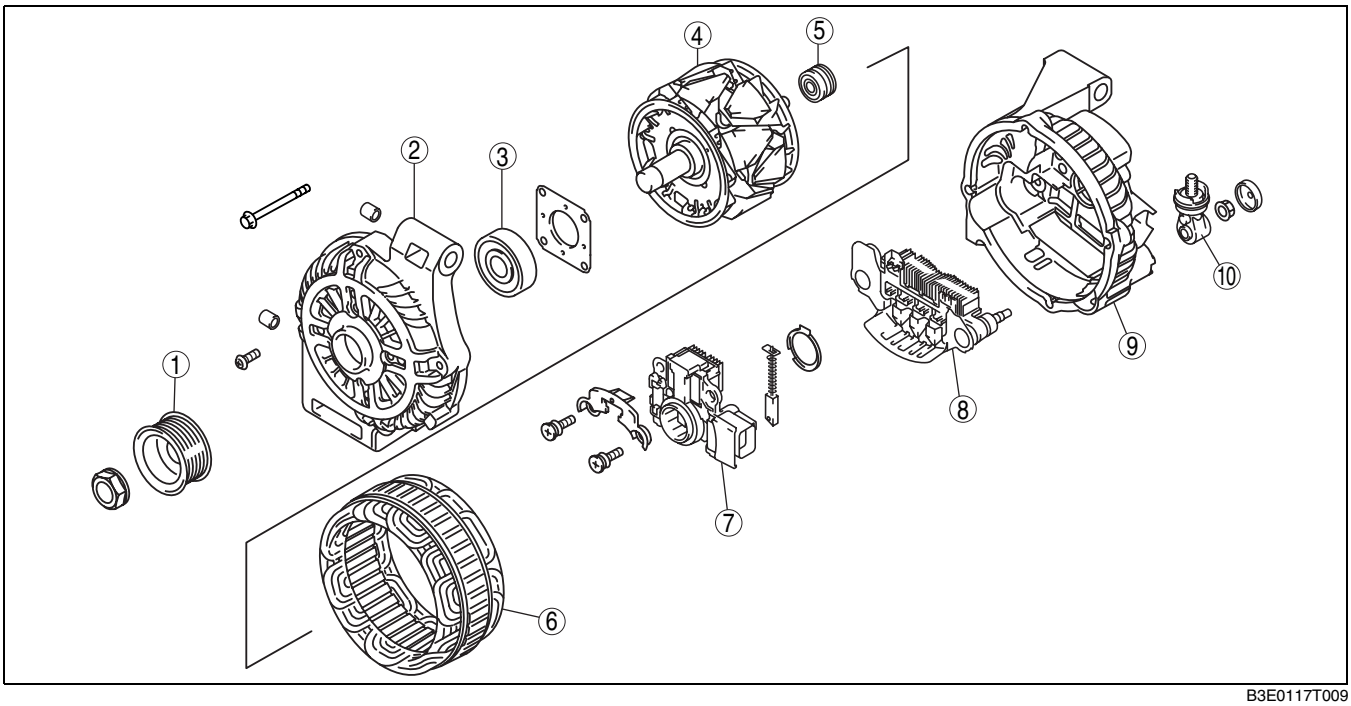

B3E0117T009

1	Pulley
2	Front cover

3	Front bearing
4	Rotor

5	Rear bearing
6	Stator
7	Regulator component (built-in power transistor)
8	Rectifier
9	Rear cover
10	Terminal B component

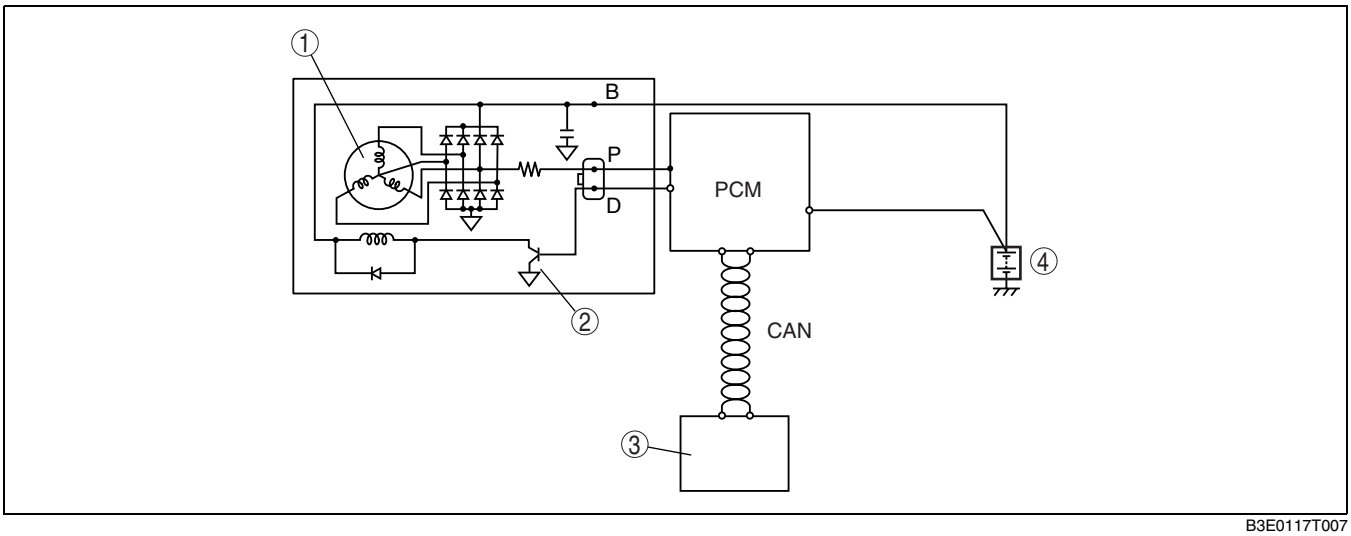

B3E0117T007

1	Stator coil
2	Power transistor

3	Instrument cluster (warning light)
4	Battery

- The generator warning light in the instrument cluster illuminates under the following conditions.
  — Charging system voltage problem
  — Charging system voltage low
  — Charging system voltage high
  — IAT sensor circuit low input
  — IAT sensor circuit high input

01–18 IGNITION SYSTEM [L8, LF]

IGNITION SYSTEM OUTLINE [L8, LF] 01–18–1
IGNITION SYSTEM STRUCTURAL VIEW [L8, LF] 01–18–1
IGNITION COIL CONSTRUCTION/ OPERATION [L8, LF] 01–18–1
SPARK PLUG CONSTRUCTION [L8, LF] 01–18–2

IGNITION SYSTEM OUTLINE [L8, LF]

DPE011800000T01

Features

Improved reliability	• Independent ignition control system with distributorless ignition coil adopted
Improved durability	• Spark plug with an iridium alloy center electrode and platinum tip ground electrode adopted

IGNITION SYSTEM STRUCTURAL VIEW [L8, LF]

DPE011800000T02

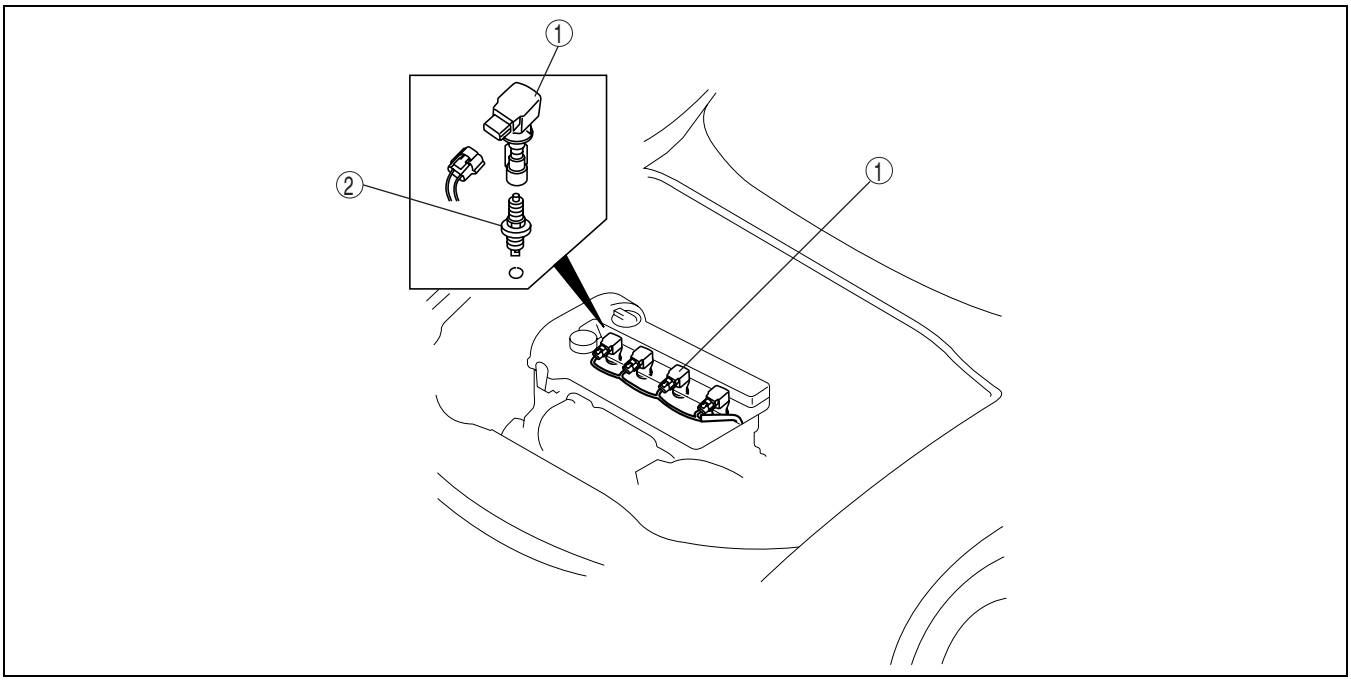

DPE118ZT1001

1	Ignition coil		2	Spark plug

IGNITION COIL CONSTRUCTION/OPERATION [L8, LF]

DPE011818100T01

Construction

- Direct ignition coils installed directly to each spark plug have been adopted. By adopting direct ignition coils, high-tension leads have been eliminated in order to simplify the parts of the ignition system, preventing voltage reduction, and improving the firing efficiency.
- Independent firing control has been adopted to eliminate firing without spark, increasing firing energy.
- The direct ignition coil consists of an ignition coil, ignition coil connector, and boot area, which has the same function as the current high-tension lead.
- The igniter has been integrated into each ignition coil.

Operation

- The firing timing of the coil is controlled by the PCM by means of a built-in igniter for optimum ignition timing control.

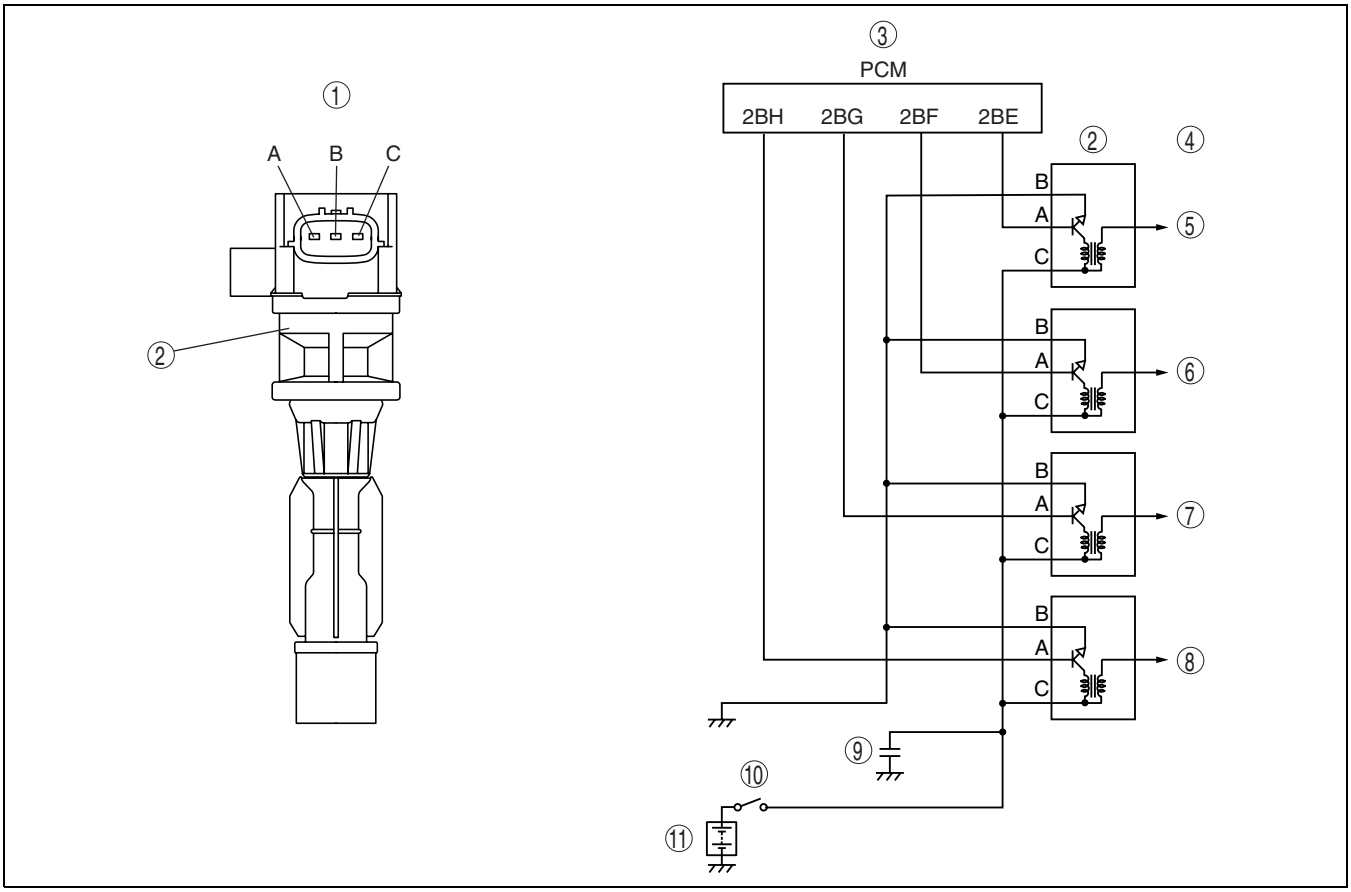

DPE118ZT1002

1	Ignition coil external view
2	Ignition coil
3	Ignition coil electrical system wiring diagram
4	Cylinder number
5	No. 1
6	No. 2

7	No. 3
8	No. 4
9	Condenser
10	Ignition switch
11	Battery

Terminal layout

Terminal		Signal
Three terminals	A	Ignition coil control signal
	B	Ground
	C	Power supply

SPARK PLUG CONSTRUCTION [L8, LF]

DPE011818110T01

- An iridium spark plug with excellent durability and firing performance has been adopted.
- The extremely thin, center electrode has a diameter of 0.6 mm {0.024 in} and is made of iridium alloy.
- Durability has been improved by the use of a platinum-tipped grounding electrode.
- Based on the thinner electrode (center electrode), electric discharge has been reduced and ignition has been improved, resulting in stable ignition performance under any driving conditions.

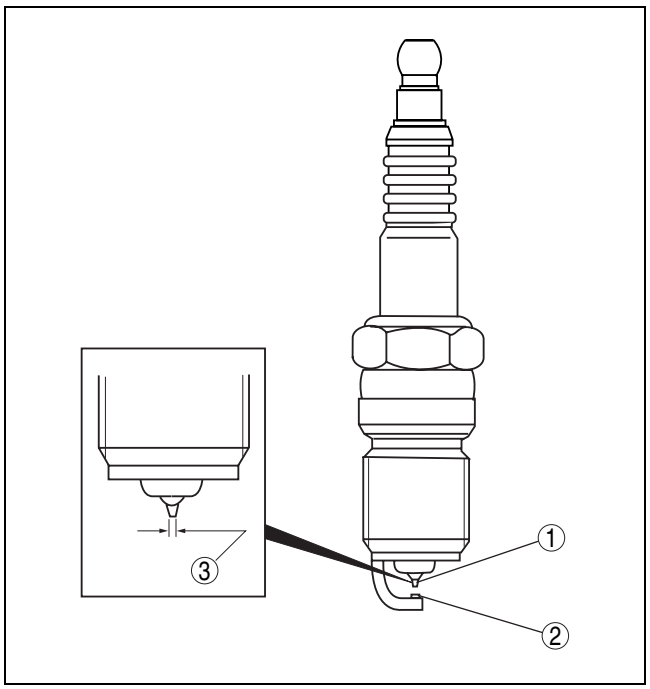

B3E0118T010

1	Iridium alloy
2	Platinum-tip
3	Center electrode

01–19A STARTING SYSTEM [L8, LF]

STARTING SYSTEM OUTLINE [L8, LF] 01–19A–1
STARTING SYSTEM STRUCTURAL VIEW [L8, LF] 01–19A–1
STARTER CONSTRUCTION [L8, LF] 01–19A–1

STARTING SYSTEM OUTLINE [L8, LF]

DPE011900000T01

Features

Improved startability	• Reduction type starter adopted

STARTING SYSTEM STRUCTURAL VIEW [L8, LF]

DPE011900000T02

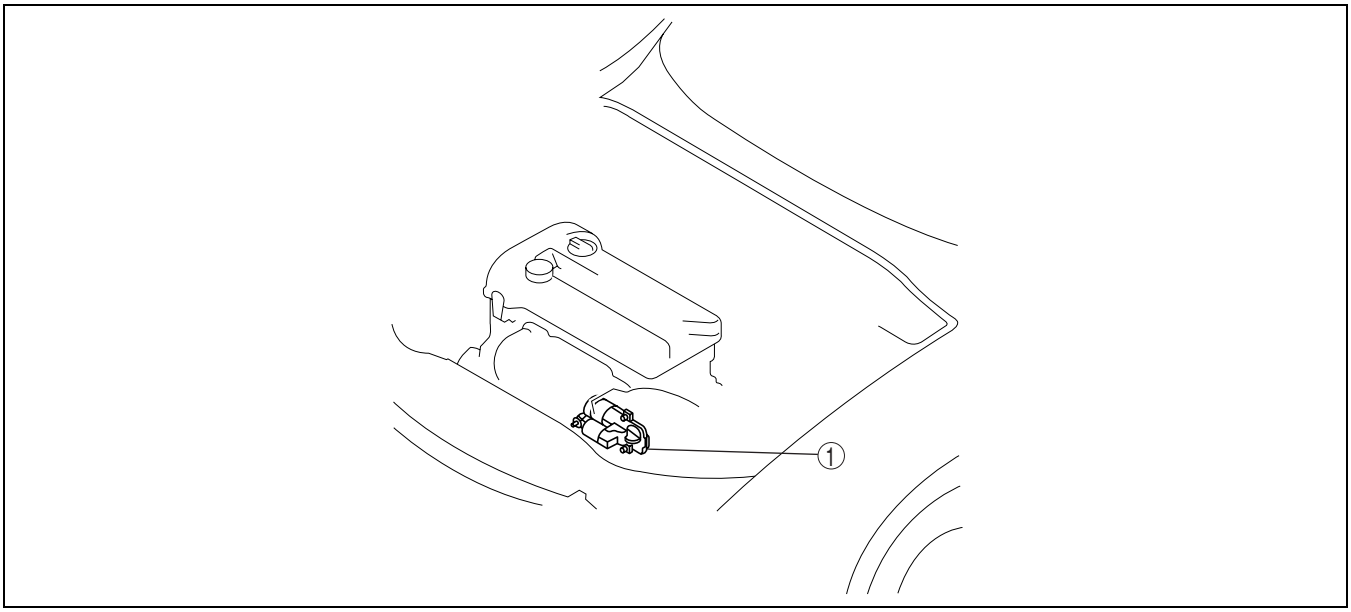

DPE119AT1001

1	Starter

STARTER CONSTRUCTION [L8, LF]

DPE011918400T01

- A high torque coaxial reduction type starter has been adopted.

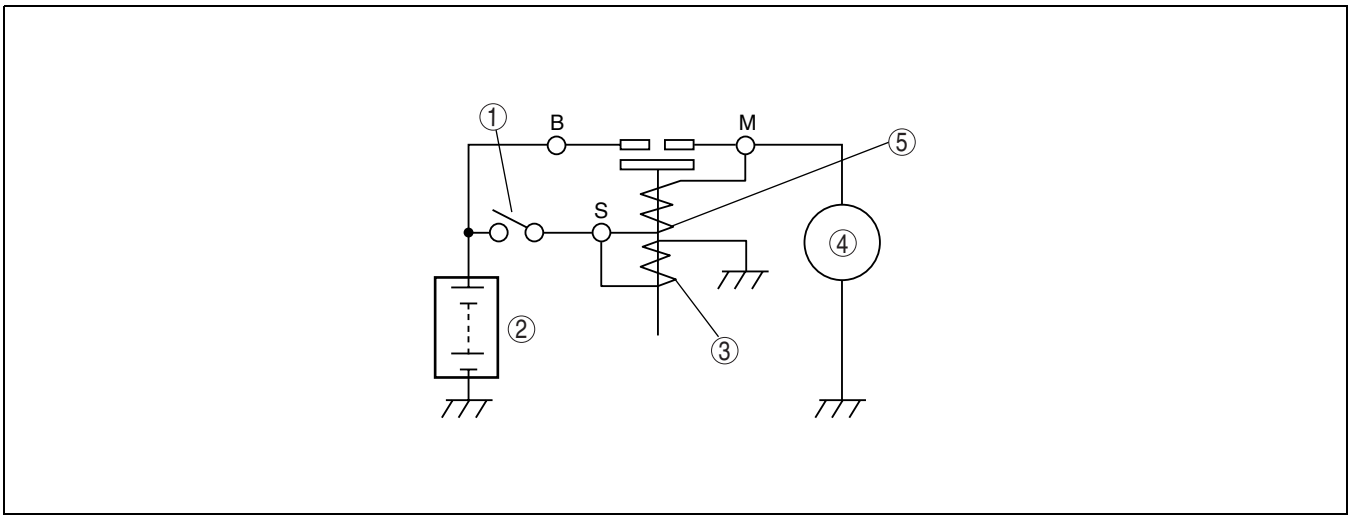

B3E0119T101

1	Ignition switch
2	Battery

3	Holding coil
4	Motor

5	Pull-in coil

01–40A CONTROL SYSTEM [L8, LF]

ENGINE CONTROL SYSTEM OUTLINE [L8, LF] 01–40A–2
ENGINE CONTROL SYSTEM STRUCTURAL VIEW [L8, LF] 01–40A–3
ENGINE CONTROL SYSTEM DIAGRAM [L8, LF] 01–40A–4
ENGINE CONTROL SYSTEM WIRING DIAGRAM [L8, LF] 01–40A–5
ENGINE CONTROL SYSTEM BLOCK DIAGRAM [L8, LF] 01–40A–9
ENGINE CONTROL SYSTEM RELATION CHART [L8, LF]. 01–40A–10
IDLE AIR CONTROL (IAC) OUTLINE [L8, LF] 01–40A–11
IDLE AIR CONTROL (IAC) BLOCK DIAGRAM [L8, LF] 01–40A–12
IDLE AIR CONTROL (IAC) OPERATION [L8, LF] 01–40A–12
FULLY-CLOSED THROTTLE POSITION LEARNING FUNCTION OUTLINE [L8, LF] 01–40A–14
FULLY-CLOSED THROTTLE POSITION LEARNING FUNCTION BLOCK DIAGRAM [L8, LF] 01–40A–14
FULLY-CLOSED THROTTLE POSITION LEARNING FUNCTION OPERATION [L8, LF] 01–40A–14
VARIABLE INTAKE AIR CONTROL OUTLINE [LF] 01–40A–15
VARIABLE INTAKE AIR CONTROL BLOCK DIAGRAM [LF] 01–40A–15
VARIABLE INTAKE AIR CONTROL OPERATION [LF] 01–40A–15
VARIABLE TUMBLE CONTROL OUTLINE [L8, LF] 01–40A–15
VARIABLE TUMBLE CONTROL BLOCK DIAGRAM [L8, LF] 01–40A–15
VARIABLE TUMBLE CONTROL OPERATION [L8, LF] 01–40A–16
FUEL INJECTION CONTROL OUTLINE [L8, LF] 01–40A–16
FUEL INJECTION CONTROL BLOCK DIAGRAM [L8, LF] 01–40A–17
FUEL INJECTION CONTROL OPERATION [L8, LF] 01–40A–18
FUEL PUMP CONTROL OUTLINE [L8, LF] 01–40A–22
FUEL PUMP CONTROL BLOCK DIAGRAM [L8, LF] 01–40A–22
FUEL PUMP CONTROL OPERATION [L8, LF] 01–40A–22
ELECTRONIC SPARK ADVANCE OUTLINE [L8, LF] 01–40A–23
ELECTRONIC SPARK ADVANCE BLOCK DIAGRAM [L8, LF] 01–40A–24
ELECTRONIC SPARK ADVANCE OPERATION [L8, LF] 01–40A–24
EGR CONTROL OUTLINE [L8, LF] 01–40A–27
EGR CONTROL BLOCK DIAGRAM [L8, LF] 01–40A–28
EGR CONTROL OPERATION [L8, LF] . . 01–40A–28
PURGE CONTROL OUTLINE [L8, LF] . . 01–40A–30
PURGE CONTROL BLOCK DIAGRAM [L8, LF] 01–40A–30
PURGE CONTROL OPERATION [L8, LF] 01–40A–30
HO2S HEATER CONTROL OUTLINE [L8, LF] 01–40A–31
HO2S HEATER CONTROL BLOCK DIAGRAM [L8, LF] 01–40A–31
HO2S HEATER CONTROL OPERATION [L8, LF] 01–40A–31
A/C CUT-OFF CONTROL OUTLINE [L8, LF] 01–40A–32
A/C CUT-OFF CONTROL BLOCK DIAGRAM [L8, LF] 01–40A–32
A/C CUT-OFF CONTROL OPERATION [L8, LF] 01–40A–32
ELECTRICAL FAN CONTROL OUTLINE [L8, LF] 01–40A–33
ELECTRICAL FAN CONTROL BLOCK DIAGRAM [L8, LF] 01–40A–33
ELECTRICAL FAN CONTROL OPERATION [L8, LF] 01–40A–33
STARTER CUT-OFF CONTROL OUTLINE [L8, LF] 01–40A–34
STARTER CUT-OFF CONTROL BLOCK DIAGRAM [L8, LF] 01–40A–34
STARTER CUT-OFF CONTROL OPERATION [L8, LF] 01–40A–34
GENERATOR CONTROL OUTLINE [L8, LF] 01–40A–35
GENERATOR CONTROL BLOCK DIAGRAM [L8, LF] 01–40A–35
GENERATOR CONTROL OPERATION [L8, LF] 01–40A–36
CONTROLLER AREA NETWORK (CAN) OUTLINE [L8, LF] 01–40A–36
PCM FUNCTION [L8, LF]. 01–40A–37
PCM CONSTRUCTION/OPERATION [L8, LF] 01–40A–37
NEUTRAL SWITCH FUNCTION [L8, LF (MTX)] 01–40A–37
NEUTRAL SWITCH CONSTRUCTION/OPERATION [L8, LF (MTX)] 01–40A–37
CLUTCH PEDAL POSITION (CPP) SWITCH FUNCTION [L8, LF (MTX)]. 01–40A–38
CLUTCH PEDAL POSITION (CPP) SWITCH CONSTRUCTION/OPERATION [L8, LF (MTX)] 01–40A–38
ENGINE COOLANT TEMPERATURE (ECT) SENSOR FUNCTION [L8, LF] 01–40A–39
ENGINE COOLANT TEMPERATURE (ECT) SENSOR CONSTRUCTION/OPERATION [L8, LF] 01–40A–39
INTAKE AIR TEMPERATURE (IAT) SENSOR FUNCTION [L8, LF] 01–40A–40

INTAKE AIR TEMPERATURE (IAT) SENSOR CONSTRUCTION/OPERATION [L8, LF] 01–40A–40
CRANKSHAFT POSITION (CKP) SENSOR FUNCTION [L8, LF]. 01–40A–40
CRANKSHAFT POSITION (CKP) SENSOR CONSTRUCTION/OPERATION [L8, LF] 01–40A–41
CAMSHAFT POSITION (CMP) SENSOR FUNCTION [L8, LF] 01–40A–41
CAMSHAFT POSITION (CMP) SENSOR CONSTRUCTION/OPERATION [L8, LF] 01–40A–41
THROTTLE POSITION (TP) SENSOR FUNCTION [L8, LF]. 01–40A–42
THROTTLE POSITION (TP) SENSOR CONSTRUCTION/OPERATION [L8, LF] 01–40A–42
MASS AIR FLOW (MAF) SENSOR FUNCTION [L8, LF]. 01–40A–43
MASS AIR FLOW (MAF) SENSOR CONSTRUCTION/OPERATION [L8, LF] 01–40A–43
HEATED OXYGEN SENSOR (HO2S) FUNCTION [L8, LF] 01–40A–44
HEATED OXYGEN SENSOR (HO2S) CONSTRUCTION/OPERATION [L8, LF] 01–40A–44
MANIFOLD ABSOLUTE PRESSURE (MAP) SENSOR FUNCTION [L8, LF] 01–40A–45
MANIFOLD ABSOLUTE PRESSURE (MAP) SENSOR CONSTRUCTION/OPERATION [L8, LF] 01–40A–45
KNOCK SENSOR (KS) FUNCTION [L8, LF] 01–40A–46
KNOCK SENSOR (KS) CONSTRUCTION/ OPERATION [L8, LF] 01–40A–46
BAROMETRIC PRESSURE (BARO) SENSOR FUNCTION [L8, LF (Vehicles equipped with BARO sensor built into PCM)] 01–40A–46
BAROMETRIC PRESSURE (BARO) SENSOR CONSTRUCTION/OPERATION [L8, LF (Vehicles equipped with BARO sensor built into PCM)] 01–40A–46

ENGINE CONTROL SYSTEM OUTLINE [L8, LF]

DPE014000000T01

Features

Improved engine torque and output	• Variable intake air control adopted (LF)
Improved emission performance	• Variable tumble control adopted • EGR system adopted
Wiring harness simplification	• CAN adopted

Specification

Item	Specification
Neutral switch	ON/OFF
CPP switch	ON/OFF
ECT sensor	Thermistor
IAT sensor (Inside MAF)	Thermistor
TP sensor	Potentiometer
MAF sensor	Hot-wire
Front HO2S	Zirconia element (Stoichiometric air/fuel ratio sensor)
Rear HO2S	Zirconia element (Stoichiometric air/fuel ratio sensor)
BARO sensor (Vehicles equipped with BARO sensor built into PCM)	Piezoelectric element
KS	Piezoelectric element
MAP sensor	Piezoelectric element
CKP sensor	Magnetic pickup
CMP sensor	Magnetic pickup
Brake switch	ON/OFF

ENGINE CONTROL SYSTEM STRUCTURAL VIEW [L8, LF]

DPE014000000T02

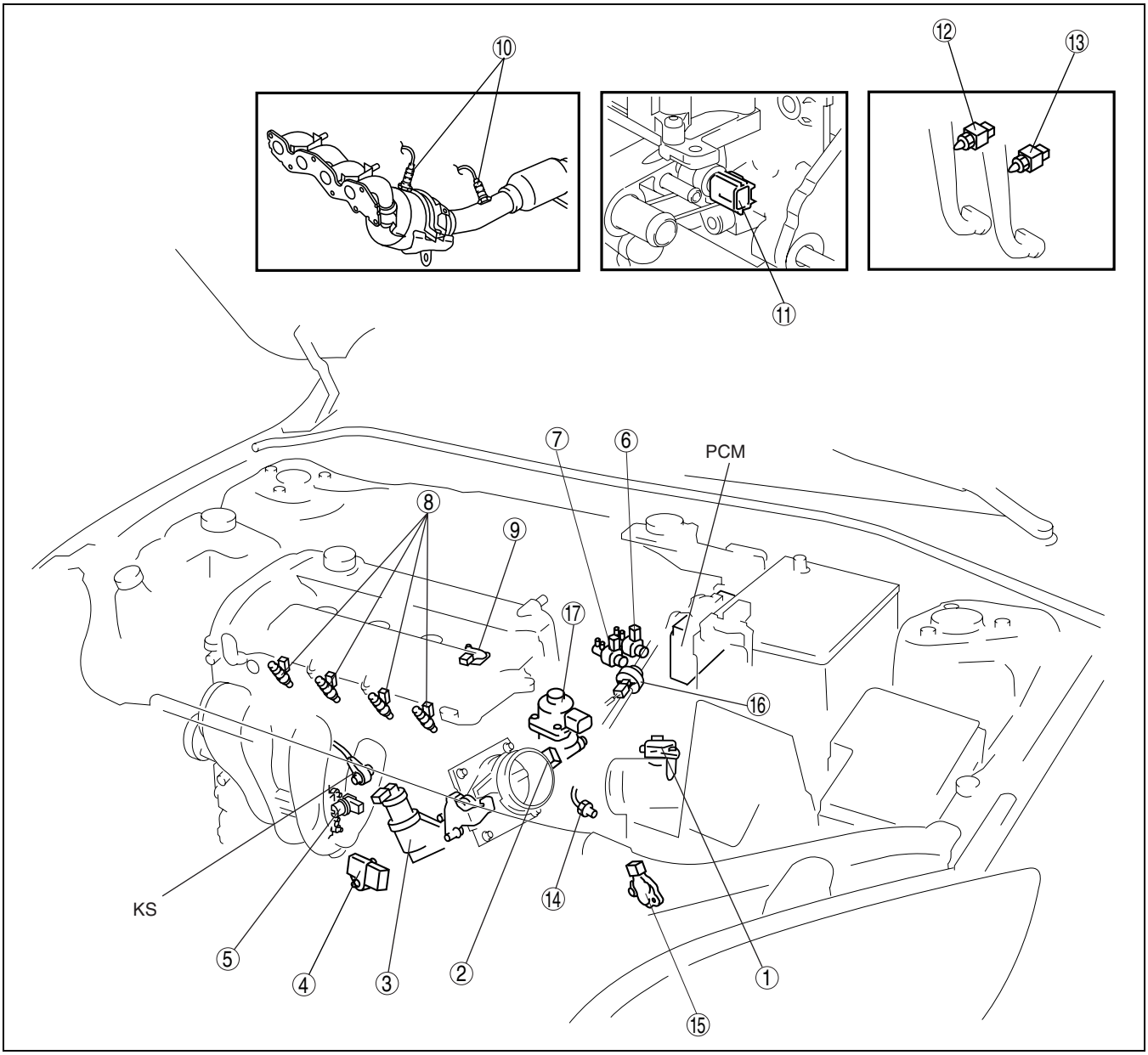

DPE0140ZT2006

1	MAF/IAT sensor
2	TP sensor
3	IAC valve
4	MAP sensor
5	CKP sensor
6	Variable tumble solenoid valve
7	Variable intake air solenoid valve (LF)
8	Fuel injector
9	CMP sensor

10	HO2S (front, rear)
11	ECT sensor
12	Brake switch
13	CPP switch (MTX)
14	Neutral switch (MTX)
15	TR switch (ATX)
16	Purge solenoid valve
17	EGR valve

ENGINE CONTROL SYSTEM DIAGRAM [L8, LF]

DPE014000000T03

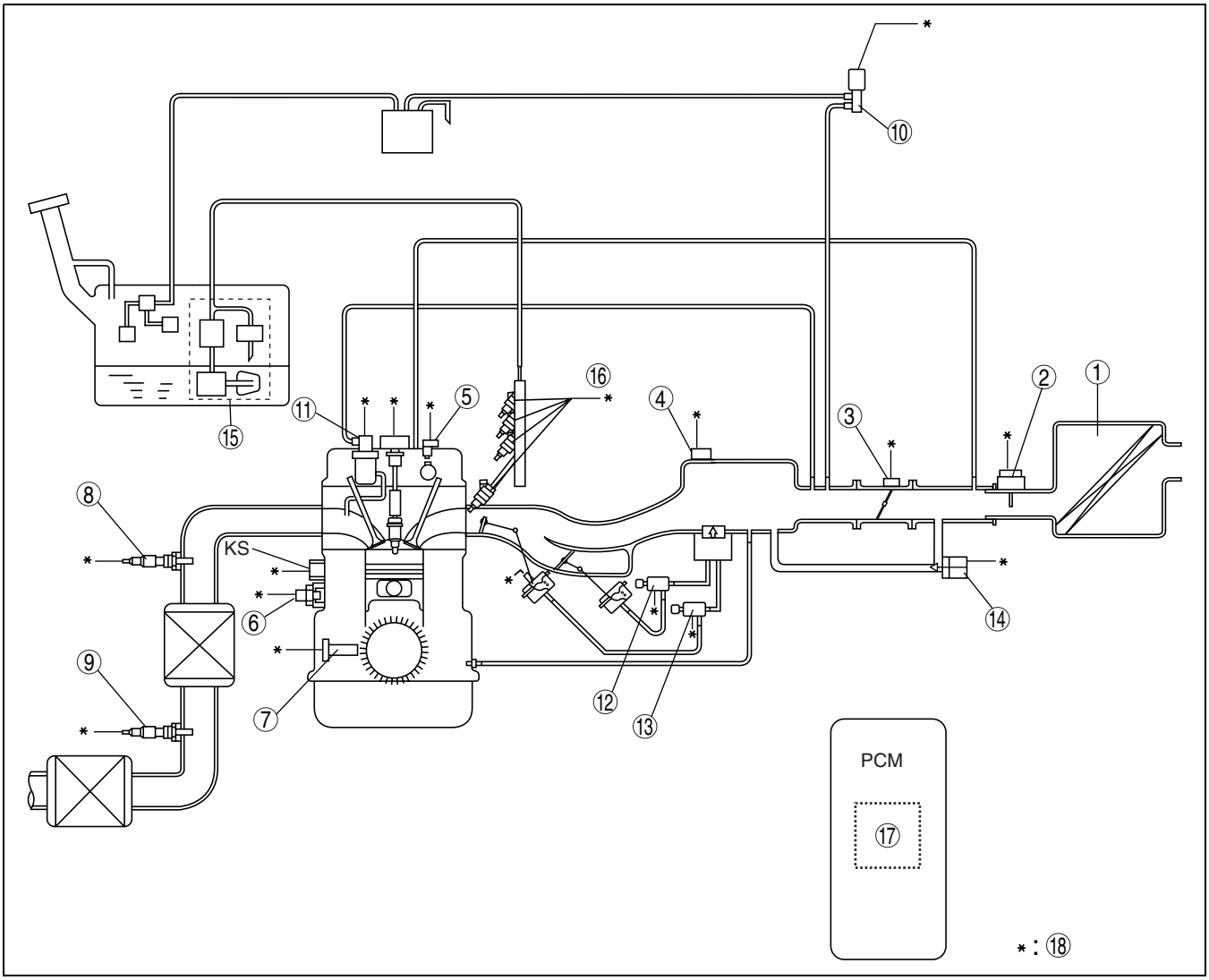

DPE0140ZW200

1	Air cleaner
2	MAF/IAT sensor
3	TP sensor
4	MAP sensor
5	CMP sensor
6	ECT sensor
7	CKP sensor
8	Front HO2S
9	Rear HO2S

10	Purge solenoid valve
11	EGR valve
12	Variable intake air solenoid valve (LF)
13	Variable tumble solenoid valve
14	IAC valve
15	Fuel pump unit
16	Fuel injector
17	BARO sensor (Vehicles equipped with BARO sensor built into PCM)
18	To PCM

ENGINE CONTROL SYSTEM WIRING DIAGRAM [L8, LF]

DPE014000000T04

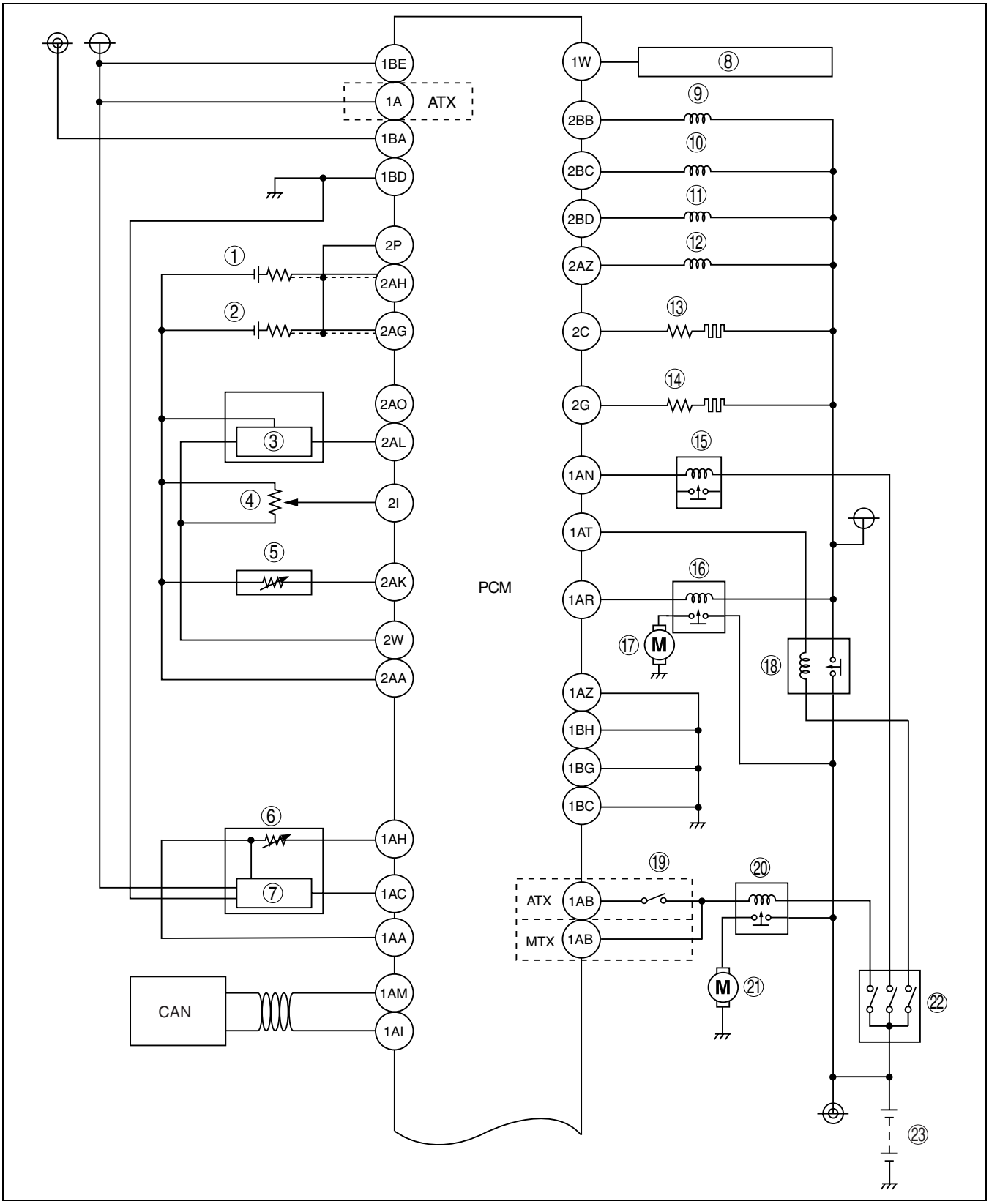

DPE0140ZT2004

1	HO2S (rear)
2	HO2S (front)
3	MAP sensor
4	TP sensor
5	ECT sensor

6	IAT sensor
7	MAF sensor
8	Fan control module
9	Fuel injector No.1
10	Fuel injector No.2

11	Fuel injector No.3
12	Fuel injector No.4
13	HO2S heater (rear)
14	HO2S heater (front)
15	A/C relay
16	Fuel pump relay
17	Fuel pump
18	Main relay
19	TR switch
20	Starter relay
21	Starter
22	Ignition switch
23	Battery

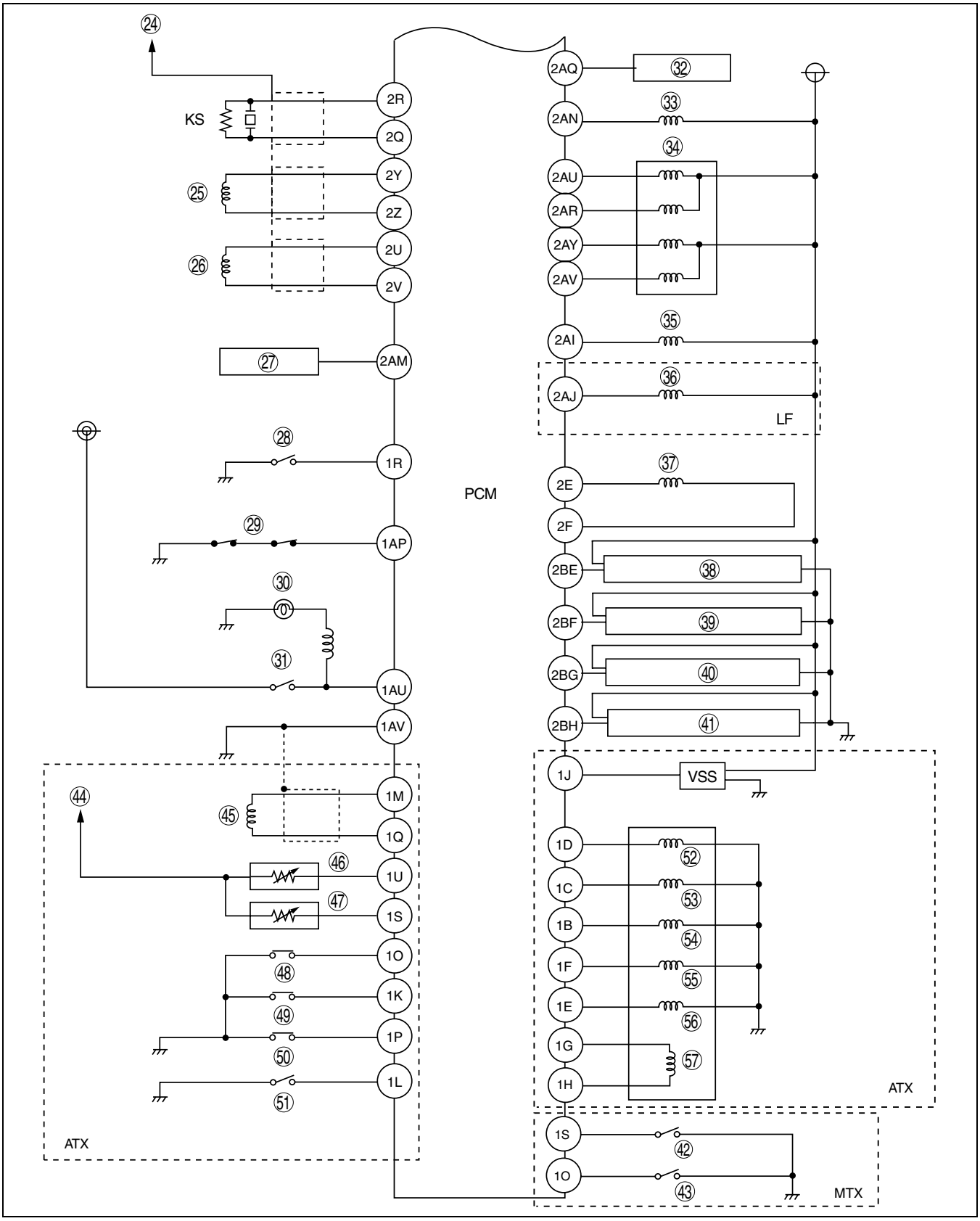

DPE102ZT2005

24	To terminal 2P
25	CKP sensor
26	CMP sensor
27	Generator
28	Refrigerant pressure switch (medium)

29	Refrigerant pressure switch (high, low)
30	Brake light
31	Brake switch
32	Generator
33	Purge solenoid valve

34	EGR valve
35	Variable tumble solenoid valve
36	Variable intake air solenoid valve (LF)
37	IAC valve
38	Ignition coil No.1
39	Ignition coil No.2
40	Ignition coil No.3
41	Ignition coil No.4
42	Neutral switch
43	CPP switch
44	To terminal 1AA
45	Input/turbine speed sensor
46	TFT sensor
47	TR switch
48	M range switch
49	Up switch
50	Down switch
51	Oil pressure switch
52	Shift solenoid C
53	Shift solenoid B
54	Shift solenoid A
55	Shift solenoid E
56	Shift solenoid D
57	Pressure control solenoid

ENGINE CONTROL SYSTEM BLOCK DIAGRAM [L8, LF]

DPE014000000T05

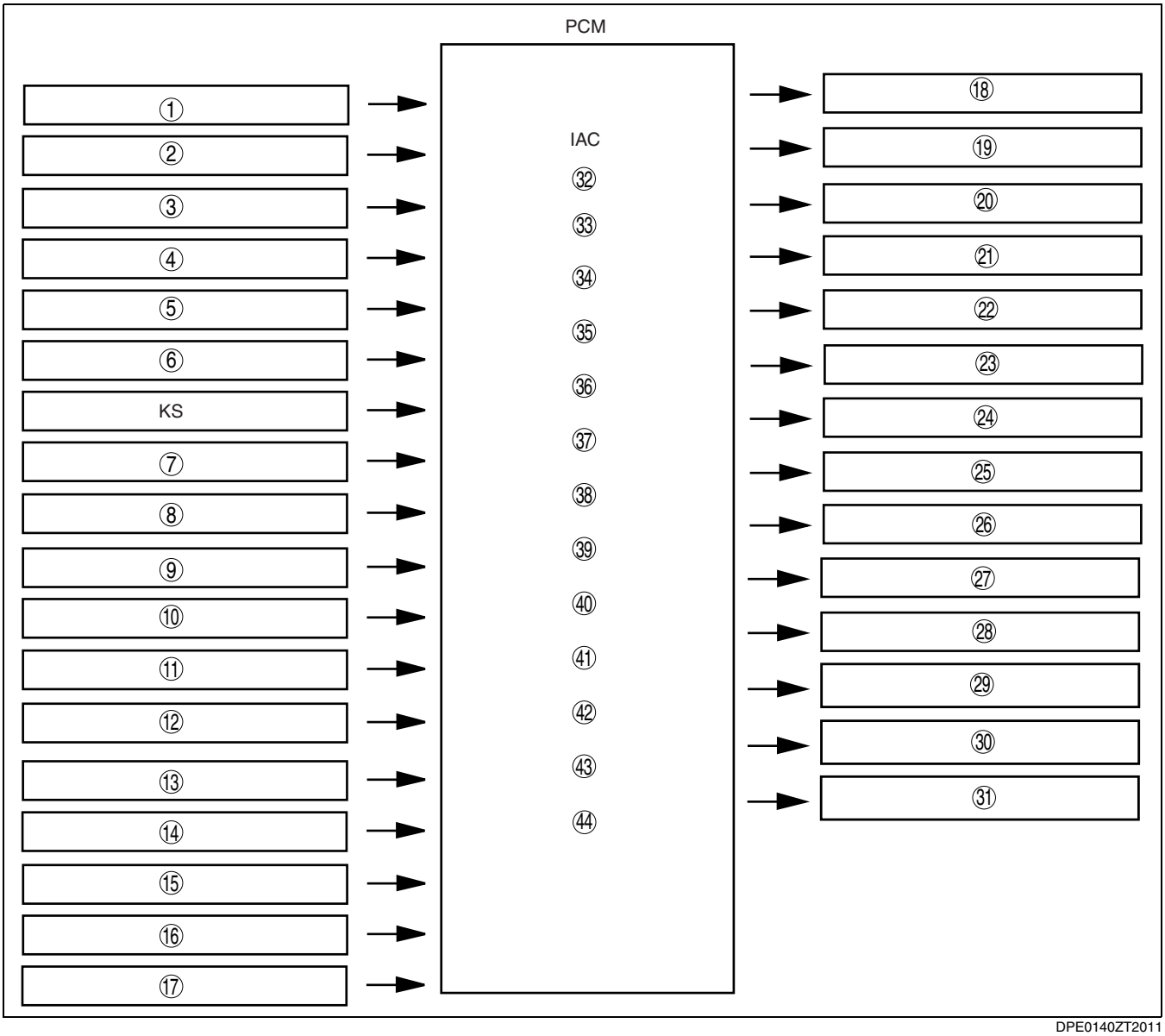

DPE0140ZT2011

1	MAF/IAT sensor
2	TP sensor
3	MAP sensor
4	CMP sensor
5	CKP sensor
6	ECT sensor
7	HO2S (front, rear)
8	ABS/DSC HU/CM (CAN signal)
9	CPP switch (MTX)
10	Neutral switch (MTX)
11	TR switch (ATX)
12	Brake switch
13	A/C on request signal
14	Refrigerant pressure switch (low-pressure switch, high-pressure switch)
15	Generator (terminal P: generation voltage)
16	Battery
17	Instrument cluster (CAN signal)
18	IAC valve

19	Variable intake air solenoid valve (LF)
20	Variable tumble solenoid valve
21	Fuel injector
22	Fuel pump relay
23	Ignition coil
24	Purge valve
25	EGR valve
26	HO2S heater (front, rear)
27	A/C relay
28	Fan control module
29	Generator (terminal D: field coil)
30	Starter relay
31	Instrument cluster (CAN signal)
32	Variable intake air control (LF)
33	Variable tumble control
34	Fuel injection control
35	Fuel pump control
36	Electronic spark advance (ESA) control
37	Purge control

38	EGR control
39	HO2S heater control
40	A/C cut-off control
41	Electrical fan control
42	Generator control
43	Starter cut-off control
44	BARO sensor (Vehicles equipped with BARO sensor built into PCM)

ENGINE CONTROL SYSTEM RELATION CHART [L8, LF]

DPE014000000T06

X: Applied

Component	Idle air control (IAC)	Variable intake air control (LF)	Variable tumble control	Fuel injection control	Fuel pump control	Electronic spark advance (ESA) control	EGR control	Purge control	Front HO2S heater control	Rear HO2S heater control	A/C cut off control	Electrical fan control	Starter cut-off control	Generator control
Input device														
IAT sensor	X			X		X	X	X	X					X
MAF sensor	X			X		X	X	X	X	X				
TP sensor	X		X	X		X	X		X		X	X		
MAP sensor	X			X				X						
ECT sensor	X		X	X		X	X		X	X	X	X		X
CMP sensor				X		X								
CKP sensor	X	X	X	X	X	X	X	X	X	X	X			X
KS						X								
Front HO2S				X				X						
Rear HO2S				X										
BARO sensor*1	X			X				X			X			
Neutral switch (MTX)	X			X		X	X	X			X			
CPP switch (MTX)	X			X		X	X	X			X			
TR switch (ATX)	X			X		X	X	X			X			
Brake switch	X			X		X								
A/C on request signal, refrigerant pressure switch (high, low pressure)	X			X		X					X	X		
Refrigerant pressure switch (medium pressure)	X													
Battery voltage				X		X	X	X				X		X
Generator terminal P	X			X		X								X
Vehicle speed signal	X			X		X	X					X		X
Instrument cluster	X			X	X	X							X	

*1: Vehicles equipped with BARO sensor built into PCM.

DPE140AT2807

X: Applied

Component	Idle air control (IAC)	Variable intake air control (LF)	Variable tumble control	Fuel injection control	Fuel pump control	Electronic spark advance (ESA) control	EGR control	Purge control	Front HO2S heater control	Rear HO2S heater control	A/C cut off control	Electrical fan control	Starter cut-off control	Generator control
Input device														
IAT sensor	X			X		X	X	X	X					X
MAF sensor	X			X		X	X	X	X	X				
TP sensor	X		X	X		X	X		X		X	X		
MAP sensor	X			X				X						
ECT sensor	X		X	X		X	X		X	X	X	X		X
CMP sensor				X		X								
CKP sensor	X	X	X	X	X	X	X	X	X	X	X			X
KS						X								
Front HO2S				X				X						
Rear HO2S				X										
BARO sensor*1	X			X				X			X			
Neutral switch (MTX)	X			X		X	X	X			X			
CPP switch (MTX)	X			X		X	X	X			X			
TR switch (ATX)	X			X		X	X	X			X			
Brake switch	X			X		X								
A/C on request signal, refrigerant pressure switch (high, low pressure)	X			X		X					X	X		
Refrigerant pressure switch (medium pressure)	X													
Battery voltage				X		X	X	X				X		X
Generator terminal P	X			X		X								X
Vehicle speed signal	X			X		X	X					X		X
Instrument cluster	X			X	X	X							X	

*1: Vehicles equipped with BARO sensor built into PCM.

DPE140AT2802

IDLE AIR CONTROL (IAC) OUTLINE [L8, LF]

DPE014000000T07

- The IAC valve ensures idling stability by the drive duty so that an optimum opening angle is obtained according to engine operation conditions.
- During A/C compressor operation, idling fuel economy has been improved through minute control according to refrigerant pressure.

IDLE AIR CONTROL (IAC) BLOCK DIAGRAM [L8, LF]

DPE014000000T08

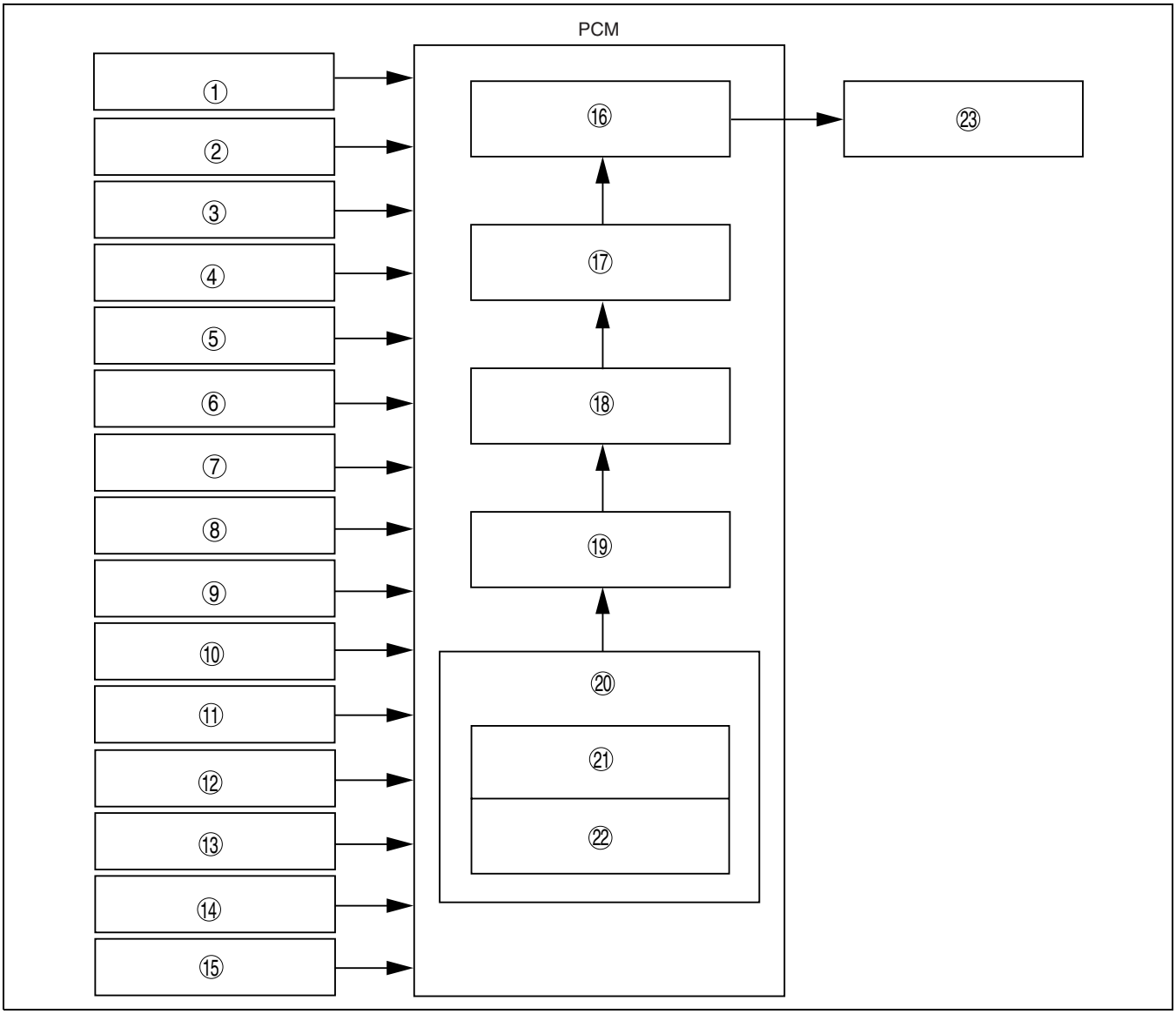

DPE0140ZT2007

1	MAF sensor
2	IAT sensor
3	TP sensor
4	MAP sensor
5	CKP sensor
6	ECT sensor
7	A/C on request signal
8	Refrigerant pressure switch
9	Generator (terminal P: generation voltage)
10	Neutral switch (MTX)
11	CPP switch (MTX)
12	TR switch (ATX)

13	Brake switch
14	Vehicle speed signal
15	Instrument cluster
16	IAC valve drive time
17	IAC target airflow amount
18	Required airflow volume
19	Required mass
20	Target charging efficiency
21	Basic charging efficiency
22	Various correction types
23	IAC valve

IDLE AIR CONTROL (IAC) OPERATION [L8, LF]

DPE014000000T09

Determination of IAC valve energization time

- The PCM determines the duty signal sent to the IAC valve that corresponds to the calculated intake air amount (IAC target air amount) necessary to regulate idle speed.
- The IAC valve receives the duty signal from the PCM which moves the plunger, and by adjusting the surface

area of the opening, the idle speed is controlled to the target speed.
- When the ignition switch is turned to the ON position, the energization time of the IAC valve is fixed at the minimum value and the IAC valve closes.
- When the engine is being cranked, the energization time of the IAC valve is set to the engine coolant temperature and the valve opens as much as the set value.

IAC target airflow amount
- The target IAC airflow amount is the estimated value of intake air amount that does not pass through the IAC valve (airflow amount flowing from the gap in the throttle valve) subtracted from the intake airflow amount required to regulate idling as calculated by the PCM (required mass).

  Required volume airflow
  — The required volume airflow is the calculated amount of intake airflow according to the change in intake airflow amount due to the difference in negative pressure that occurs before and after the throttle valve based on the target charging efficiency, and the change in intake air density occurring with the change in intake airflow temperature.

  Target charging efficiency
  — The target charging efficiency is the charging efficiency* required for the engine operation conditions.
  — The target charging efficiency is calculated by adding the corrections according to engine operation conditions to the basic charging efficiency determined by the engine coolant temperature.

* : The charging efficiency is the ratio of the actual amount of intake air to the maximum air charging amount of the cylinder mass.This value is large in proportion to the increase in engine load.

Correction	Target	Conditions	Correction amount
A/C load correction	Prevents decrease in idle speed due to A/C operation.	A/C is operating.	A/C operation time→correction
Electrical load correction	Prevents decrease in idle speed due to electrical load operation.	Idle speed during electrical load operation and under any condition during driving	High electrical load→large correction
D-range correction (ATX)	Prevents decrease in idle speed due to shifting into D-range	D-range signal is input.	Low idle speed when shifted to D range→large correction
Dashpot correction	Prevents decrease in idle speed due to insufficient intake air amount during deceleration.	Decelerated	High engine speed→large correction
Correction at engine start	Prevents decrease in idle speed after engine start.	After cranking and engine start	Low ECT→large correction
Hot engine restart correction	Prevents decrease in idle speed from hot engine restart.	Just after cranking and engine start when the ECT is **60 °C {140 °F} or more the IAT is 50 °C {122 °F} or more**	High intake airflow temperature→large correction
Feedback correction A	Sets idle speed to target engine speed.	Idle speed during idling (vehicle is stopped) is over or under the target engine speed (except during test mode when the engine speed is **300 rpm or less**).	Actual idle speed Target engine speed or less→volume increase correction Target engine speed or more→volume decrease correction
Feedback correction B	Sets to the target engine speed when the idle speed has decreased in the range not corrected by feedback correction A, and prevents a decrease in idle speed.	At fully closed throttle, the engine speed is the target engine speed or more and when the feedback correction A is not performed (except during test mode).	Large difference between actual idle speed and target engine speed→large correction
Learning correction	Stores intake air volume changes based on differences between engines and changes due to aged deterioration, and feedback.	During feedback correction A when ECT is **85 °C {185 °F} or more**.	During idling→average value of feedback correction A

Target idle speed
- The target idle speed for various engine operation conditions are as follows:

Standard

Condition	Engine speed (rpm)*1			
	MTX		ATX	
	L8	LF		
	Neutral position		N range	D range
No load	650—750	600—700	650—750	550—650 600—700*3
Electrical loads*2 ON (38—48A)	650—750	650—750	650—750	600—700
Electrical loads*2 ON (Above 48A)	700—800	700—800	700—800	670—770
A/C ON and refrigerant pressure switch (middle) OFF	700—800	700—800	650—750	650—750
A/C ON and refrigerant pressure switch (middle) ON	700—800	700—800	670—770 750—800*3	670—770 750—850*3

*1 : Excludes temporary idle speed drop just after the electrical loads are turned on.
*2 : Alternator generating current value.
*3 : Israel specs.

Inhibition condition

- If the IAC valve is damaged (when DTC P0511 is detected), power to the IAC valve is cut (IAC valve closes) preventing a sudden increase in engine speed.

FULLY-CLOSED THROTTLE POSITION LEARNING FUNCTION OUTLINE [L8, LF]

DPE014000000T10

- Function for learning the fully-closed position of the throttle valve (idling position)
- The fully-closed throttle voltage of the throttle position sensor, obtained through learning, is used for the throttle valve opening angle correction.

FULLY-CLOSED THROTTLE POSITION LEARNING FUNCTION BLOCK DIAGRAM [L8, LF]

DPE014000000T11

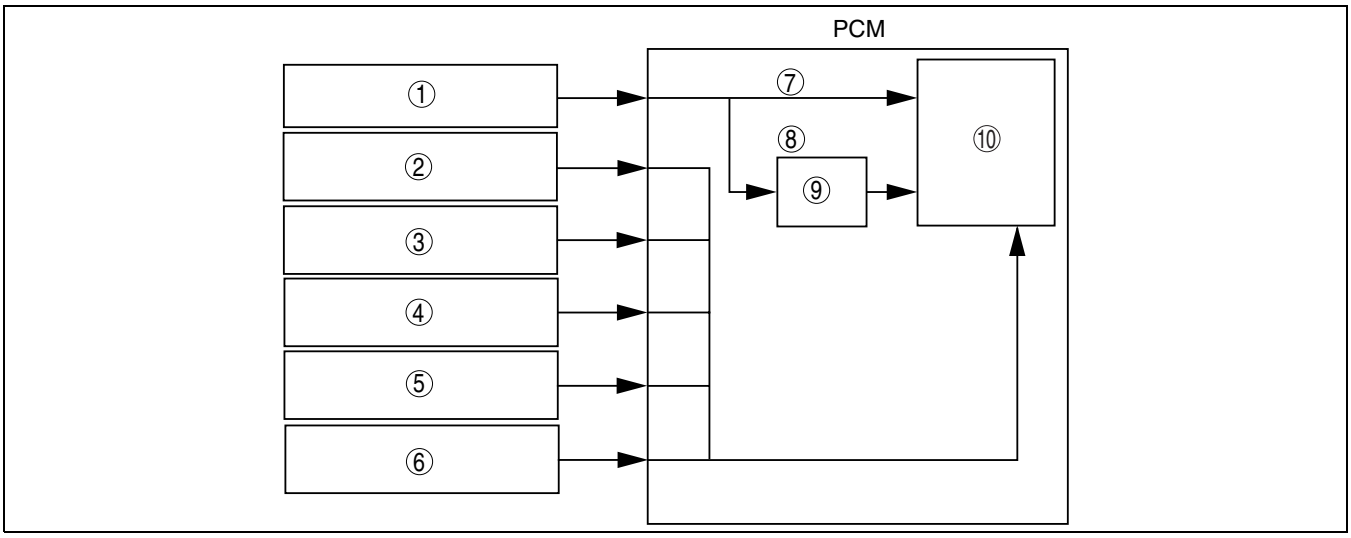

DPE140AT2805

1	TP sensor
2	Battery voltage
3	CKP sensor
4	Neutral switch (MTX)
5	CPP switch (MTX)

6	TR switch (ATX)
7	Throttle valve opening angle signal
8	Fully-closed determination signal
9	Throttle learning function
10	Logic for various controls

FULLY-CLOSED THROTTLE POSITION LEARNING FUNCTION OPERATION [L8, LF]

DPE014000000T12

Fully-closed throttle learning value (fully-closed throttle voltage value) update

- If the calculated average value for the fully-closed throttle falls below the current fully-closed throttle learning

value, the PCM updates the calculated average value as a new value.
- When the throttle valve is considered to be fully-closed, the average fully-closed throttle value when all of the following conditions are met is calculated by averaging several sample values that are detected.
  — No load (in neutral) with vehicle stopped
  — If throttle valve opening angle has not changed
  — Other than when in test mode
  — Engine speed is **less than 3,000 rpm**.

Inhibition condition of fully-closed throttle learning
- If any of the following conditions are met, the PCM determines that there is a fully-closed throttle learning difficulty and substitutes a set value (fixed value) for the fully-closed throttle learning value.
  — During Test mode
  — Throttle position sensor damage (DTCs P0122, P0123 detected)
  — Battery terminals reconnected
  — If fully-closed throttle learning value exceeds the set upper limit value
  — If fully-closed learning value decreases below set lower limit value.

VARIABLE INTAKE AIR CONTROL OUTLINE [LF]

DPE014000000T13

- Energizes the variable intake air solenoid valve according to engine speed for enhanced inertia charging effect.

VARIABLE INTAKE AIR CONTROL BLOCK DIAGRAM [LF]

DPE014000000T14

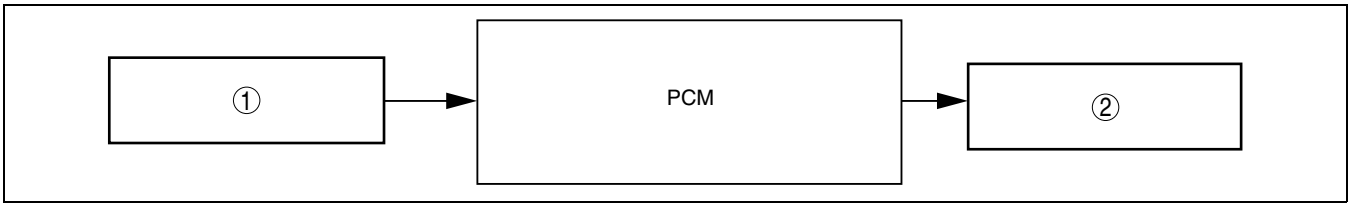

B3E0140T013

1	CKP sensor		2	Variable intake air solenoid valve (LF)

VARIABLE INTAKE AIR CONTROL OPERATION [LF]

DPE014000000T15

- The PCM energizes the variable intake air solenoid valve when the engine speed is **less than 4,750 rpm**, opening the variable intake air shutter valve to enhance the inertia charging effect at the low engine speed range.
- The PCM blocks energization to the variable intake air solenoid valve when the engine speed is **4,750 rpm or more**, closing the variable intake shutter valve to enhance the inertia charging effect at the high engine speed range.

VARIABLE TUMBLE CONTROL OUTLINE [L8, LF]

DPE014000000T16

- At cold engine start, the following occur due to the closing of the variable tumble shutter valve for improved cold engine exhaust emission performance.
  — Improved intake airflow speed near injectors
  — Strong air tumble occurs in the combustion changer, promoting vaporization mixture of intake air and fuel

VARIABLE TUMBLE CONTROL BLOCK DIAGRAM [L8, LF]

DPE014000000T17

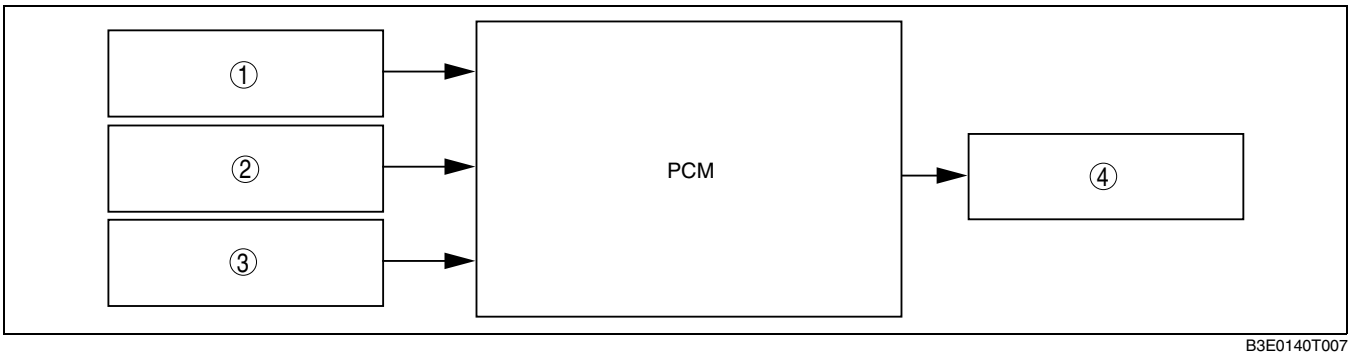

B3E0140T007

1	TP sensor		2	CKP sensor

3	ECT sensor
4	Variable tumble solenoid valve

VARIABLE TUMBLE CONTROL OPERATION [L8, LF]

DPE014000000T18

Operation conditions

- When all of the following conditions are met, the PCM energizes the coil of variable tumble solenoid valve. As a result, negative pressure is introduced to the diaphragm chamber of the variable tumble shutter valve actuator, pulling the actuator rod and closing the variable tumble shutter valve.
  - Engine speed **less than 3,750 rpm**
  - Engine coolant temperature **less than 63 °C {145 °F}**
  - Throttle valve opening angle is at the specified value or less (changes according to engine speed)

Inhibition conditions

- When a DTC for the engine coolant temperature sensor or throttle position sensor has been stored, the variable tumble control is inhibited and the variable tumble shutter valve is constantly open.

FUEL INJECTION CONTROL OUTLINE [L8, LF]

DPE014000000T19

- Performs optimum fuel injection according to engine operation conditions.
- The PCM determines the engine operation conditions based on the signals from the following input devices and drives the injectors at the optimum fuel injection time (fuel injection amount) and the fuel injection timing to inject fuel. For the construction/operation of the fuel injector, refer to “FUEL SYSTEM, FUEL INJECTOR CONSTRUCTION/OPERATION”.

FUEL INJECTION CONTROL BLOCK DIAGRAM [L8, LF]

DPE014000000T20

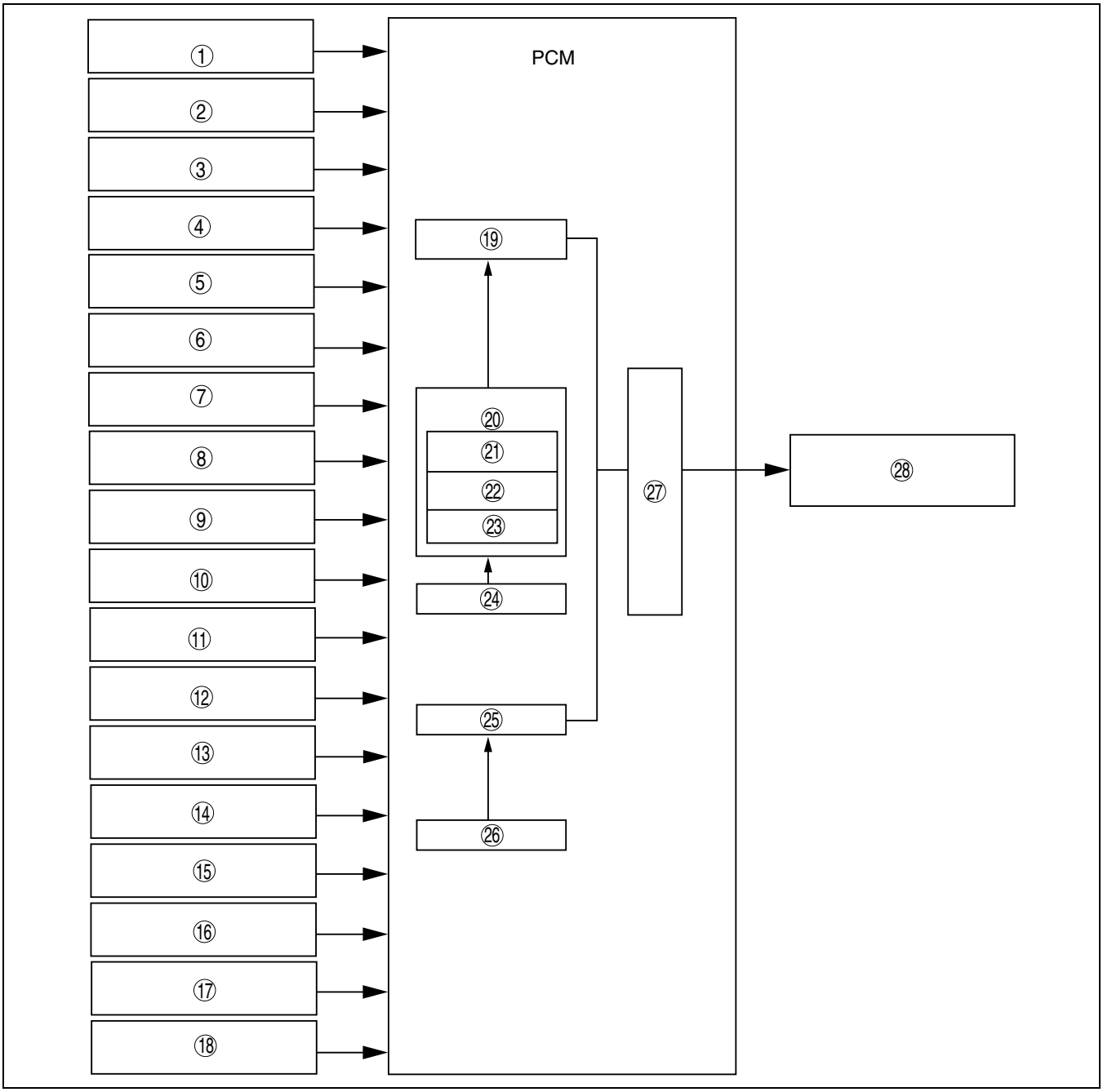

DPE0140ZT2008

1	IAT sensor
2	MAF sensor
3	TP sensor
4	MAP sensor
5	CMP sensor
6	CKP sensor
7	ECT sensor
8	HO2S (front, rear)
9	Neutral switch (MTX)
10	CPP switch (MTX)
11	TR switch (ATX)
12	Brake switch
13	A/C switch
14	Refrigerant pressure switch

15	Battery voltage
16	Generator terminal P
17	Vehicle speed signal (CAN)
18	Instrument cluster
19	Synchronized fuel injection
20	Effective injection time
21	Injection time at engine start
22	Basic injection time
23	Various correction types
24	Ineffective injection time
25	Non-synchronized injection control
26	Ineffective injection time
27	Fuel injector energization timing and energization time

28	Fuel injector

FUEL INJECTION CONTROL OPERATION [L8, LF]

DPE014000000T21

Operation

Injection timing

- There is synchronized fuel injection, which performs fuel injection by the setting of the crankshaft position, and non-synchronized fuel injection which performs fuel injection when the condition for fuel injection is met regardless of the crankshaft position.

Synchronized fuel injection

- The crankshaft rotation is synchronized by each intake and exhaust stroke of the cylinders, and fuel injection is performed by the fuel injection timing and the injection amount corresponding to the input signals of the following sensors.
  - — CKP sensor
  - — MAF sensor
  - — ECT sensor
  - — IAT sensor

Non-synchronized fuel injection

- The crankshaft rotation is not synchronized and fuel injection is performed by the injection timing and injection amount as triggered by the input signals of the following sensors.
  - — TP sensor
  - — MAF sensor
  - — ECT sensor
  - — IAT sensor

Relation between synchronized and non-synchronized fuel injection

- If synchronized and non-synchronized fuel injection happen to occur together, fuel is injected by adding the fuel injection timing of both.

Injection time

- The PCM calculates the fuel injection amount according to the engine operation conditions as the fuel injection time and energizes the fuel injectors.

Fuel injector energization time and operation conditions

- The fuel injectors cause an operation delay with the start of energization from the PCM. The PCM calculates the fuel injection time by adding the non-injection time (ineffective injection time) with the actual injection time (effective injection time), and energizes the fuel injectors for this time.

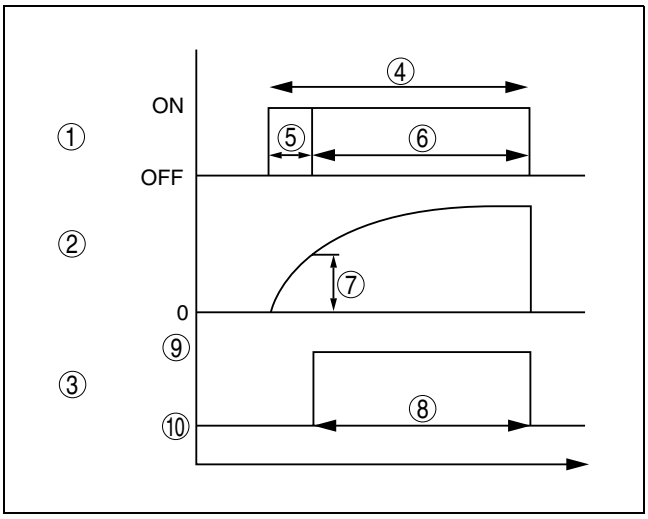

B3E0140T011

1	Injection signal
2	Fuel injector current
3	Fuel injector
4	Fuel injection time
5	Ineffective injection time
6	Effective injection time
7	Fuel injector opening valve electrical current
8	Fuel injector valve opening time
9	Open
10	Closed

- The fuel injection time is based on the following formula:

Fuel injection time = effective injection time + ineffective injection time
Ineffective injection time
— The fuel injectors cause a delay in operation due to a delay in the build-up of operation current from coil inductance with the start of energization, and by the mass of the needle valve and plunger, and spring resistance. This delay is the ineffective injection time.
— The non-injection time is affected by the change in battery voltage. Accordingly, the PCM sets the non-injection time according to the battery voltage
Effective injection time
— The fuel injector opening valve time which is the actual fuel injection time is called the effective injection amount.

Determination of effective injection time
- The PCM divides the engine operation conditions into control zones according to engine speed and engine load and determines the effective injection time at each control zone to perform optimum air/fuel ratio control in all engine driving ranges.

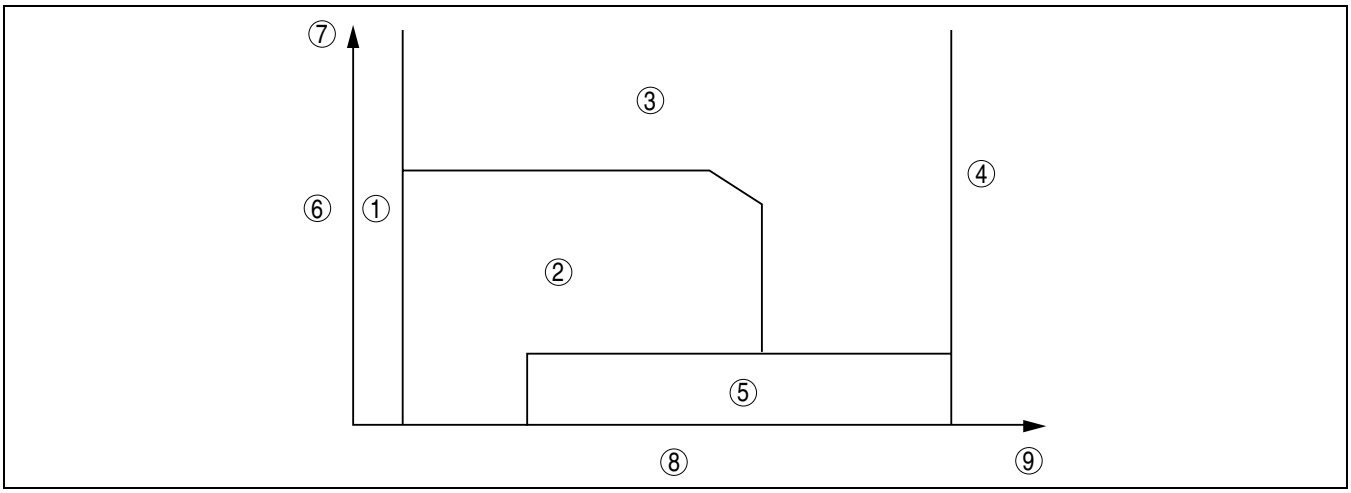

B3E0140T012

1	Start zone
2	Feedback zone
3	High load volume increase zone
4	Excessive speed fuel cut zone
5	Deceleration fuel cut zone

6	Intake air amount
7	Large
8	Engine speed
9	High

Start zone
Purpose
- Improved engine startability

Operation condition
- When engine speed is **500 rpm or less**.

Determination of fuel injection time
- According to engine coolant temperature (ECT sensor) and engine speed (CKP sensor)

Feedback Zone
Purpose
- Improved fuel economy
- Improved exhaust gas purification

Control condition
- During engine operation other than high load volume increase zone and engine start zone.

Determination of fuel injection time
- During normal driving, the amounts of various correction types are added to the basic injection time to set to the theoretical air/fuel ratio.

High load volume increase zone
Purpose
- Improved driveability

Control condition
- Either the charging efficiency or the throttle valve opening angle is a fixed value or more.

Determination of fuel injection time
- Corrections are added to the basic injection amount and the high load coefficient is calculated according to the engine speed, mass intake airflow amount and the throttle valve opening angle.

Excessive speed fuel cut zone
Purpose
- Engine protection

Control conditions
- When the engine speed is **6,800 rpm or more (L8), 7,000 rpm or more (LF)**.
- When engine speed is **5,500 rpm or more** and the engine coolant temperature is **approx. -15 °C {5 °F} or less**.
- When the following conditions continue for **2 min or more**:
  — Vehicle is stopped.
  — Engine speed is **5,000 rpm or more**.
  — Engine coolant temperature is **approx. 117 °C {243 °F}**.

Note
- The PCM determines that the driver continues to unintentionally depress the accelerator pedal

Determination of fuel injection time
- Fuel injection time is set to 0 (fuel cut).

Deceleration fuel cut zone
Purpose
- Improved fuel economy
- Prevents overheating of the catalytic converter

Control conditions
- When the engine conditions are as follows (**10 s or longer** after engine start):
  — Fully closed throttle valve
  — When the engine speed is at set value or more (differs depending on the ECT) (charging efficiency at fixed value or more, mass airflow sensor normal)

Determination of fuel injection time
- The fuel injection time is set to 0 (fuel cut).

Calculation method list for fuel injection time

A: Fuel injection time base, B: Correction for fuel injection time

Contents (Fuel injection time, calculation method, or determination method)		**Control zone**				
		Start	**Feedback**	**High load volume increase**	**Excessive speed fuel cut**	**Deceleration fuel cut**
Injection time at start	**Set value according to engine coolant temperature (low engine coolant temperature→long injection time)**	A				
Basic injection time	**Basic injection time = charging efficiency x fuel flow coefficient**		A	A		
Fuel cut	**Fuel injection time = 0**				A	A
Ineffective injection time	**Set time according to injector performance**	B	A	A		
Volume increase correction at engine start	Purpose: Maintains stability of engine speed just after engine start **Correction condition** • Specified time according to engine coolant temperature directly after engine start **Correction amount** • Low engine coolant temperature→large correction • Low intake air temperature→large correction	B	B			

Front HO2S feedback correction	Purpose: Controls air/fuel ratio to the theoretical air/fuel ratio **Correction condition** • When engine coolant temperature is at set value or more **Correction amount** • Front HO2S electromotive force is approx. **less than 0.45 V** →volume decrease correction • Front HO2S electromotive force is approx. **less than 0.45 V** →volume increase correction		B			
Rear HO2S feedback correction	Purpose: Corrects feedback amount according to deterioration of front HO2S and catalytic converter **Correction condition** • Engine coolant temperature is at set value or more • Engine speed is **500—4,250 rpm** • Charging efficiency is **10—80 %** **Correction amount** • According to rear HO2S electromotive force→correction		B			
D-range correction (ATX)	Purpose: Ensures engine speed stability during D-range shifting **Correction condition** • Throttle valve fully-closed and shifted into D range **Correction amount** • Low engine coolant temperature→large correction		B			
High load volume increase correction	Purpose: Improved engine output, decrease of exhaust gas temperature **Correction condition** • According to engine speed when the throttle valve opening angle is the fixed value or more, otherwise, according to engine speed and charging efficiency **Correction amount** • High engine speed, high charging efficiency→large correction			B		
Warm-up volume increase correction	Purpose: When engine coolant temperature is low, maintains combustion stability **Correction condition** • While at set engine coolant temperature **Correction amount** • High charging efficiency, low engine coolant temperature→large correction		B	B		
A/C load increase correction	Purpose: Maintains engine speed stability during A/C operation **Correction condition** • A/C is operating **Correction amount** • Low engine coolant temperature→large correction		B	B		
Acceleration increase correction	Purpose: Corrects fuel injection delay during acceleration to ensure drive stability **Correction condition** • When acceleration amount (change in the amount of charging efficiency) is at set value or more **Correction amount** • Low engine coolant temperature→large correction • Large acceleration amount→large correction		B	B		
Deceleration volume increase correction	Purpose: Ensures engine speed stability after fuel cut recovery **Correction condition** • When recovery from fuel cut **Correction amount** • Low engine speed→large correction		B			
Learning correction	Purpose: Corrects deviation in air/fuel ratio from changes due to aged deterioration of mechanical devices **Correction condition** • Under any condition except purge control **Correction amount** • Learning value based on average of feedback correction value		B	B		

Intake air pressure correction	Purpose: Corrects ineffective charging time deviation from change in intake manifold vacuum **Correction condition** • Under any condition except start zone **Correction amount** • More intake manifold vacuum→large correction		B	B		

Fuel cut
- Includes fuel cut under the following conditions except fuel cut at excessive engine speed according to engine operation and deceleration fuel cut.

Sensor damage fuel cut
Purpose
- To prevent engine damage from abnormal ignition due to a malfunction input of a cylinder identification or the engine speed signal.

Control condition
- When damage to the crankshaft position sensor or camshaft position sensor is detected.

Dechoke control
Purpose
- To improve engine starting startability when spark plugs are flooded.

Control conditions
- When cranking close to fully-open throttle valve

Fuel cut during immobilizer system activation
Purpose
- To prevent vehicle theft

Execution conditions
- When an engine stop request signal is received from the immobilizer system, the PCM force-stops the fuel injectors. Therefore the engine stops.

FUEL PUMP CONTROL OUTLINE [L8, LF]

DPE014000000T22

- The fuel pump is operated when the ignition switch is turned to the ON position to improve startability. As a result, fuel pressure increases rapidly and stable fuel control is performed.

FUEL PUMP CONTROL BLOCK DIAGRAM [L8, LF]

DPE014000000T23

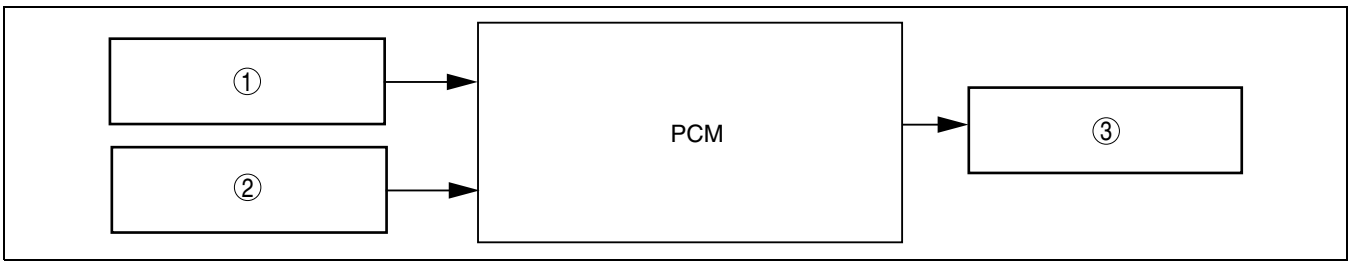

B3E0140T064

1	CKP sensor
2	Instrument cluster (Immobilizer system)

2	Fuel pump relay

FUEL PUMP CONTROL OPERATION [L8, LF]

DPE014000000T24

Operation Condition
- When the ignition switch is turned to the ON position, the PCM turns the fuel pump relay on for **1 s**, then off.
- When it is detected that the NE signal rises during cranking, the fuel pump relay turns on.
- When the engine is stopped, the fuel pump relay turns off.

Operation Inhibition Condition
- When receiving an engine stop request signal from the immobilizer system, the PCM force-stops control of the

fuel injectors. As a result, the engine does not start.

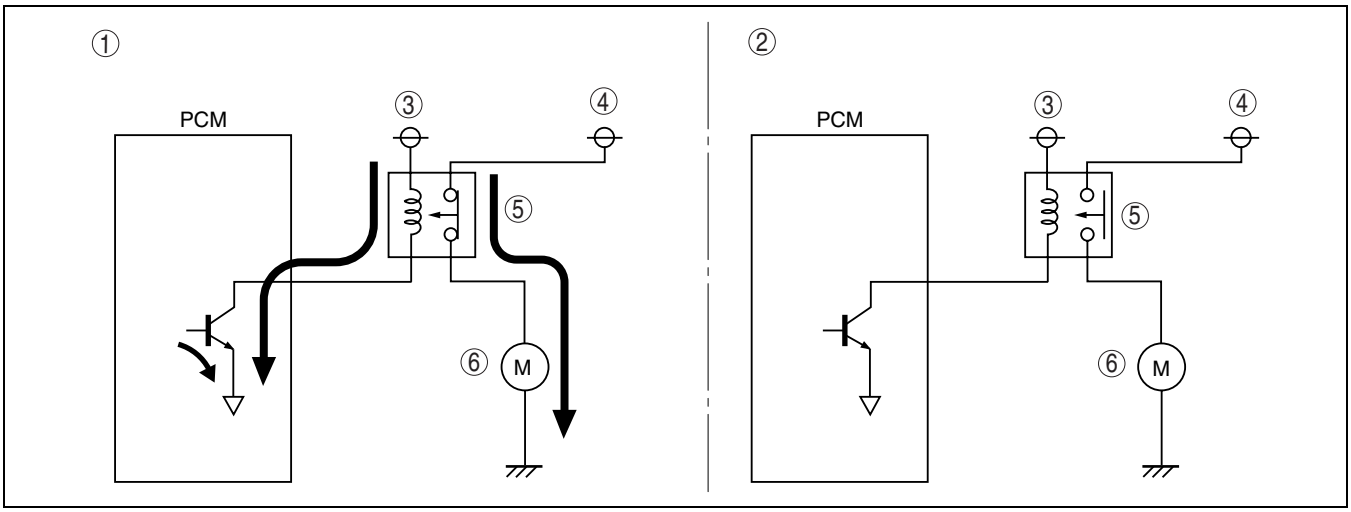

B3E0140T560

1	Engine stop request signal not received
2	Engine stop request signal received
3	From main relay

4	From battery
5	Fuel pump relay
6	Fuel pump

ELECTRONIC SPARK ADVANCE OUTLINE [L8, LF]

DPE014000000T25

- Controls ignition to optimum timing according to engine operation conditions.
- Serviceability has been improved by eliminating the necessity of ignition timing.
- The PCM determines the engine operation conditions based on input signals from sensors, blocks current to the ignition coils by the calculated ignition timing, and discharges (ignition) the sparks plugs based on the effect of electromagnetic mutual induction.

ELECTRONIC SPARK ADVANCE BLOCK DIAGRAM [L8, LF]

DPE014000000T26

Block Diagram

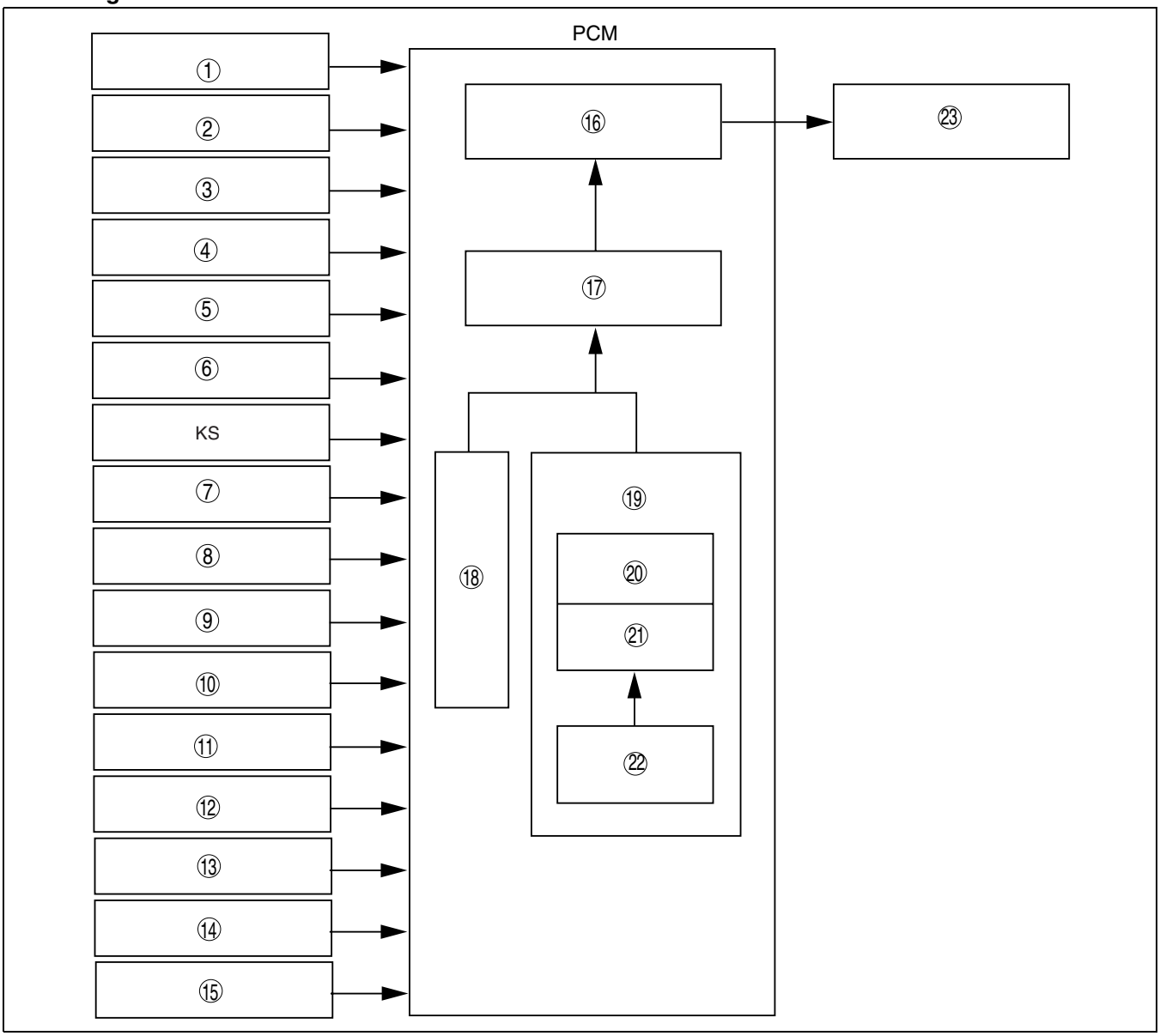

DPE140AT2601

1	IAT sensor
2	MAF sensor
3	TP sensor
4	CMP sensor
5	CKP sensor
6	ECT sensor
7	Neutral switch (MTX)
8	CPP switch (MTX)
9	TR switch (ATX)
10	Brake switch
11	A/C on request signal
12	Battery voltage

13	Generator terminal P
14	Vehicle speed signal (CAN)
15	Instrument cluster (engine stop request signal)
16	Igniter operation time
17	Ignition timing
18	Fixed ignition
19	Cycle estimated ignition
20	Idle spark advance
21	Basic spark advance
22	Corrections
23	Ignition coil

ELECTRONIC SPARK ADVANCE OPERATION [L8, LF]

DPE014000000T27

Ignition method

- The PCM excites the ignition coils employing either fixed ignition or cycle estimated ignition according to engine

operation conditions.

Ignition method	Ignition timing	Ignition coil energization period
Fixed ignition	Fixed at BTDC **10**°	Fixed period at BTDC **10**° to end of energization
Cycle estimated ignition	Ignition at timing appropriate to engine operation conditions based on input signals	• Energization time (ignition coil energization time) to igniter is determined according to battery voltage • Cylinder independent ignition

Timing chart

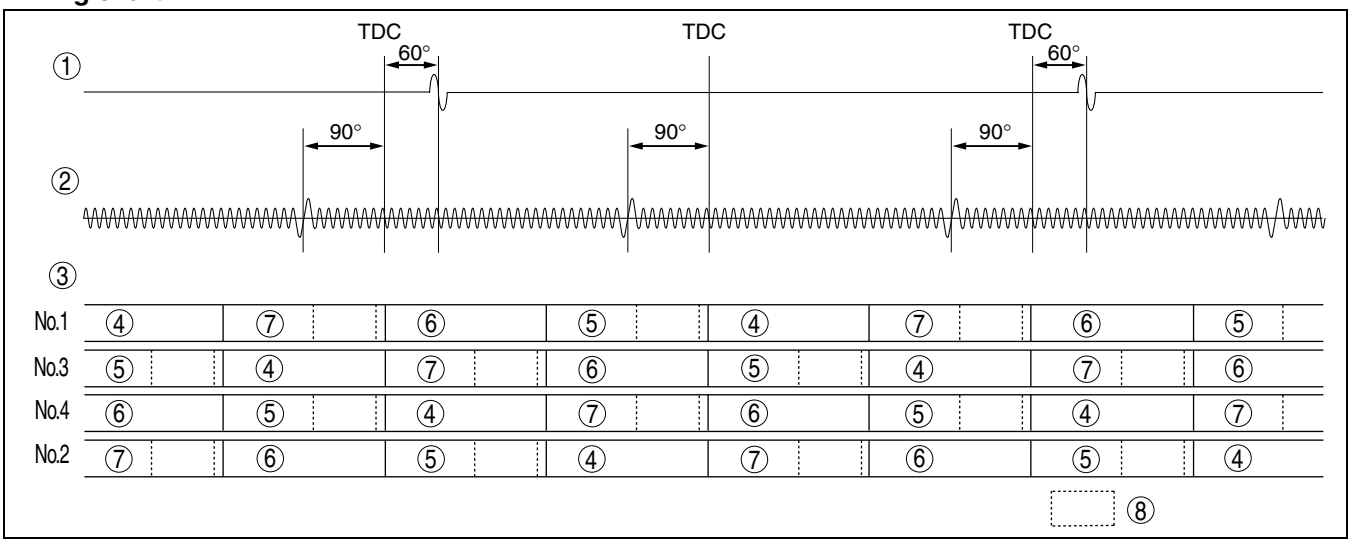

B3E0140T015

1	CMP sensor input
2	CKP sensor input
3	Cylinder number
4	Intake air

5	Exhaust air
6	Expansion
7	Compression
8	Ignition coil energization allowance period

Determination of Ignition Timing
Division of control zones

- The PCM divides the engine control operations into each control zone according to the engine speed and throttle valve opening angle to determine the ignition timing by each of the control zones to perform optimum ignition control under all engine operation conditions.

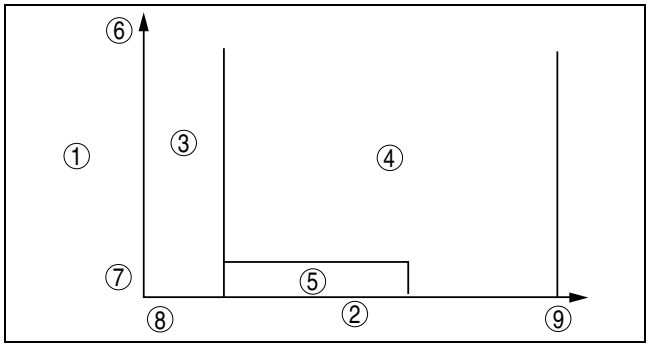

B3E0140T016

1	Throttle valve position
2	Engine speed
3	Start zone
4	Regular zone
5	Idle zone
6	Open
7	Closed
8	Low
9	High

Control zone	Control condition	Ignition method
Start zone	Engine speed is **500 rpm or less**. When mass airflow sensor is damaged.	Fixed ignition
Idle zone	Fully-closed throttle valve when engine speed is the target idle speed + 1,750 rpm*1, **2,250 rpm***2	Determines ignition timing adding each correction to the idle spark advance
Cycle estimated zone	Engine operation except start zone and idle zone	Determines ignition timing adding each correction to the basic spark advance

*1 : ATX
*2 : MTX

Ignition timing calculation method table

A: Ignition timing base, B: Correction for ignition timing

Contents		Calculation method or determination method for ignition timing, advance value and correction	Control zone		
			Start zone	Idling zone	Cycle estimated zone
Fixed ignition		**Fixed at BTDC approx. 10° CA**	A		
Cycle estimated ignition	**Idle spark advance**	Set value according to target speed and charging efficiency*1		A	
	Basic spark advance	Set value according to engine speed and charging efficiency*1			A

Correction	Engine coolant temperature advance correction	Purpose: Ensures combustion stability when engine coolant temperature is low **Except during idling** • High charging efficiency*1, low engine coolant temperature→large correction		B	B
	Warm-up promotion spark retard correction	Purpose: Activates the catalytic converter earlier **Approx. 20 s*2, 50 s*3 after engine start** • According to engine coolant temperature→correction		B	
	Feedback correction	Purpose: Ensures idling stability **During idling (inhibited during test mode)** • Large difference between actual engine speed and target engine speed→large correction • Small difference between actual engine speed and target engine speed→small correction		B	
	EGR correction	Purpose: Prevents deviation of required ignition timing during EGR gas feed **When EGR valve position is the specified value or more except during EGR valve initialization** • According to engine speed and charging efficiency*1→correction			B
	Shift spark retard correction (ATX)	Purpose: Reduces shift shock during shifting **Determined according to torque reduction request signal from the ATX control** • Large torque down request during shifting→large correction			B
	Deceleration fuel cut recovery retard correction	Purpose: Reduces shock after recovery from deceleration fuel cut and during re-acceleration while in deceleration fuel cut **Re-acceleration after recovery from deceleration fuel cut and while in deceleration fuel cut** • Low engine coolant temperature→large correction		B	B
	Acceleration spark retard correction	Purpose: Prevents knocking and shock during sudden acceleration **Acceleration when charging efficiency*1 volume increase (acceleration amount) is specified value or more** • High acceleration amount→high retard			B
	Standing start spark retard correction	Purpose: Prevents shock when vehicle accelerates from a standing start **When vehicle accelerates from a standing start** • According to engine speed, throttle valve opening angle, engine coolant temperature and intake air temperature→correction			B
	Knocking spark retard correction	Purpose: Knocking suppression **When knocking is detected while driving under high load** • Large amount of knocking→large correction			B

*1 : Charging efficiency is ratio of actual intake air amount to maximum air charging amount (mass volume) of cylinder. This value increases proportionately to the increase in engine load.
*2 : General (L.H.D. R.H.D.) specs MTX model.
*3 : Except for General (L.H.D. R.H.D.) specs MTX model.

Ignition inhibition condition

- When receiving an engine stop request signal from the immobilizer system, the PCM force-stops control of ignition coils. As a result, the engine does not start.

EGR CONTROL OUTLINE [L8, LF]

DPE014000000T28

- Adjusts the EGR valve to the optimum opening angle according to engine operation conditions.
- The valve in the EGR valve allows for more precise control by being driven by the stepping motor.

EGR CONTROL BLOCK DIAGRAM [L8, LF]

DPE014000000T29

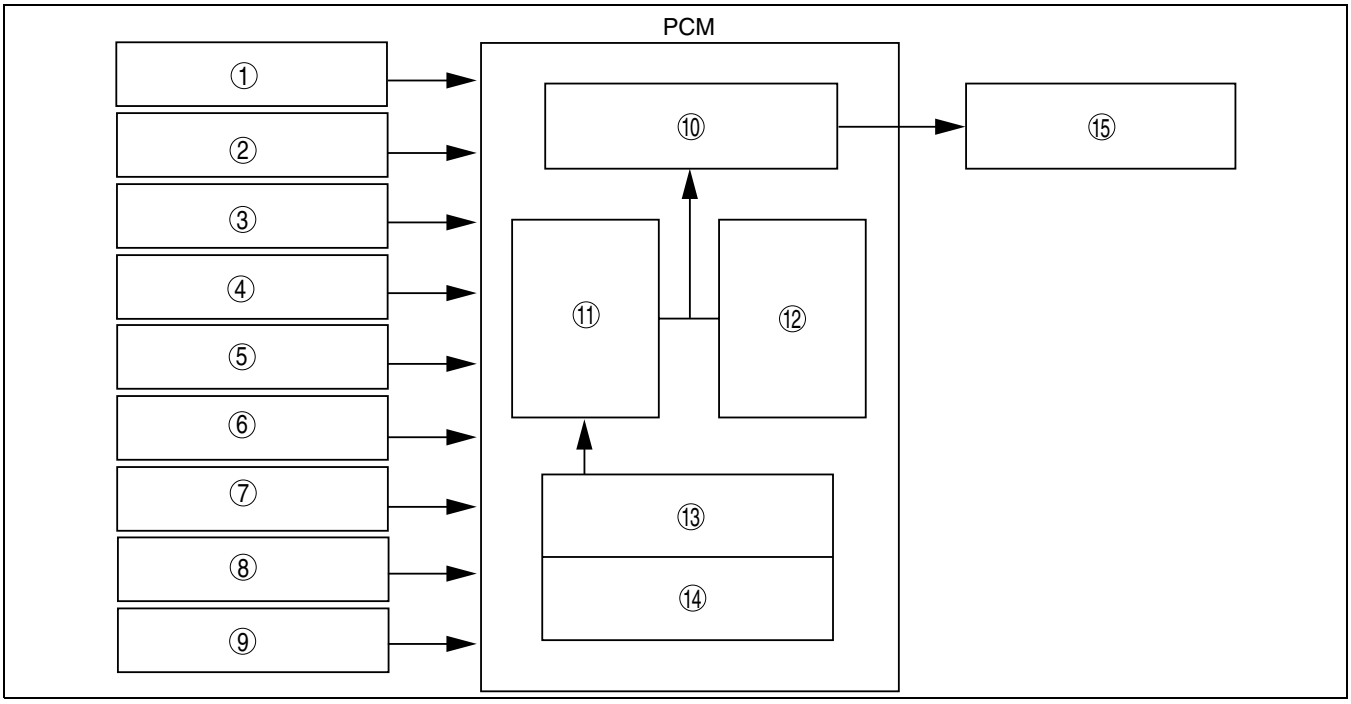

B3E0140T017

1	MAF sensor
2	IAT sensor
3	TP sensor
4	ECT sensor
5	CKP sensor
6	Neutral switch (MTX)
7	CPP switch (MTX)
8	Battery voltage

9	Vehicle speed signal (CAN)
10	EGR valve operation step number
11	Target EGR valve position
12	Current EGR valve position
13	Basic EGR valve position
14	Corrections
15	EGR valve

EGR CONTROL OPERATION [L8, LF]

DPE014000000T30

Stepping motor operation principles

- The PCM opens/closes the EGR valve by controlling the amount of stepping motor rotation (step number).
- The stepping motor operates by the combination of coils No.1—4, according to the stepping motor step number.

Energization condition for each coil

ON: Energization OFF Non-energization

When current step number divided by four	Evenly divisible	One leftover	Two leftover	Three leftover
Coil No.1 (PCM terminal 2AU)	ON	ON	OFF	OFF
Coil No.2 (PCM terminal 2AR)	OFF	OFF	ON	ON
Coil No.3 (PCM terminal 2AY)	OFF	ON	ON	OFF
Coil No.4 (PCM terminal 2AV)	ON	OFF	OFF	ON

Example of energization condition for each coil and step number

ON: Energization, OFF Non-energization

Step number	0	1	2	3	4	5	6	7	8	9	10	30	52
Coil No.1 (PCM terminal 2AU)	ON	ON	OFF	OFF	ON	ON	OFF	OFF	ON	ON	OFF	OFF	ON
Coil No.2 (PCM terminal 2AR)	OFF	OFF	ON	ON	OFF	OFF	ON	ON	OFF	OFF	ON	ON	OFF
Coil No.3 (PCM terminal 2AY)	OFF	ON	ON	OFF	OFF	ON	ON	OFF	OFF	ON	ON	ON	OFF

Step number	0	1	2	3	4	5	6	7	8	9	10	30	52
Coil No.4 (PCM terminal 2AV)	ON	OFF	OFF	ON	ON	OFF	OFF	ON	ON	OFF	OFF	OFF	ON

- The energization condition of stepping motor coils No.1—4 can be verified by verifying the step number from "SEGRP" on the PID/data monitor function of the WDS.

Control outline
- The PCM constantly calculates the optimum target EGR valve position according to the engine operation conditions and controls the EGR stepping motor step number so that the current EGR valve position is close to the target.
- If the current EGR valve position is smaller than the target EGR position (deviation is a positive number), the PCM increases the stepping motor step number and opens the EGR valve. If larger (deviation is a negative number), the PCM decreases the stepping motor step number and closes the EGR valve. Step numbers are increased or decreased by one step at a time.

Target EGR valve position
- The PCM determines the value to increase or decrease the EGR valve opening angle according to the engine operation conditions. The PCM determines the target EGR valve position through each correction based on the basic EGR valve position that is set according to the engine speed and load.

Target EGR valve position determination table

Contents		Method for calculating or determining the EGR valve position and correction
Basic EGR valve position		Within steps 0—52 in the stepping motor determined as follows: • When the engine speed is **1,200—4,200 rpm** and the charging efficiency*1 is within **12.5—75%**, the engine speed and charging efficiency are determined to be at basic position • When the EGR control inhibition conditions are met, step 0
Correction *2	Engine coolant temperature correction	Purpose: Improved driveability **Engine coolant temperature is 50—55 °C {122—131 °F}** • The step number is restricted between **0—50 %** of the basic EGR valve position (low engine coolant temperature—low step number) according to the engine coolant temperature. **Engine coolant temperature is 55—65 °C {131—149 °F}** • The step number is restricted between **50—100 %** of the basic EGR valve position (low engine coolant temperature→low step number) according to the engine coolant temperature.
	Intake air temperature correction	Purpose: Improved driveability **Intake air temperature is 50 °C {122 °F} or less** • Step number is restricted to **100 %** of the basic EGR valve position (basic EGR valve position = step number) **Intake air temperature is 50 °C {122 °F} or more** • Step number is restricted between **40—100 %** of basic EGR valve position (low intake air temperature→large step number)
	Acceleration/ deceleration correction	Purpose: Improved driveability **During acceleration/deceleration, when the throttle valve opening angle fluctuation rate is the set value or more** • During acceleration→step number is restricted to **20 %** of basic EGR valve position • During deceleration→step number is restricted to **0 %** of basic EGR valve position

*1 : The charging efficiency is the ratio of the actual amount of intake air to the maximum air charging amount (mass volume) of the cylinder. This value increases proportionately to the increase in engine load.
*2 : The correction is to restrict the basic EGR valve position value. Except for the above conditions and inhibition conditions, the correction value is 100 %, and the target EGR valve position equals the EGR valve position value.

Inhibition conditions
- To improve driveability and ensure exhaust emission performance, the EGR valve closes when any of the following conditions are met. ( ) indicate input/output devices.
  — When throttle valve is fully closed (throttle position sensor)
  — When vehicle is stopped (speed sensor)
  — When the fuel injection control is in the high volume increase zone
  — The engine coolant temperature is **50 °C {122 °F} or less** (engine coolant temperature sensor)
  — During deceleration (throttle position sensor)
  — Engine speed is **less than 1,200 rpm** or **more than 4,200 rpm** (crankshaft position sensor)
  — Charging efficiency is **less than 12.5 %** or **more than 75 %** (crankshaft position sensor, mass airflow

sensor)
— During traction control

PURGE CONTROL OUTLINE [L8, LF]

DPE014000000T31

- An appropriate amount of evaporative gas is fed into the dynamic chamber by the driving of the purge solenoid valve according to the engine operation conditions to ensure driveability and prevent release of evaporative gas into the atmosphere.
- The PCM determines the engine operation conditions based on the signals from the input devices indicated in the figure below to drive the purge solenoid valve. For the construction/operation of the purge solenoid valve, refer to “EMISSION SYSTEM, PURGE SOLENOID VALVE, CONSTRUCTION/OPERATION”.

PURGE CONTROL BLOCK DIAGRAM [L8, LF]

DPE014000000T32

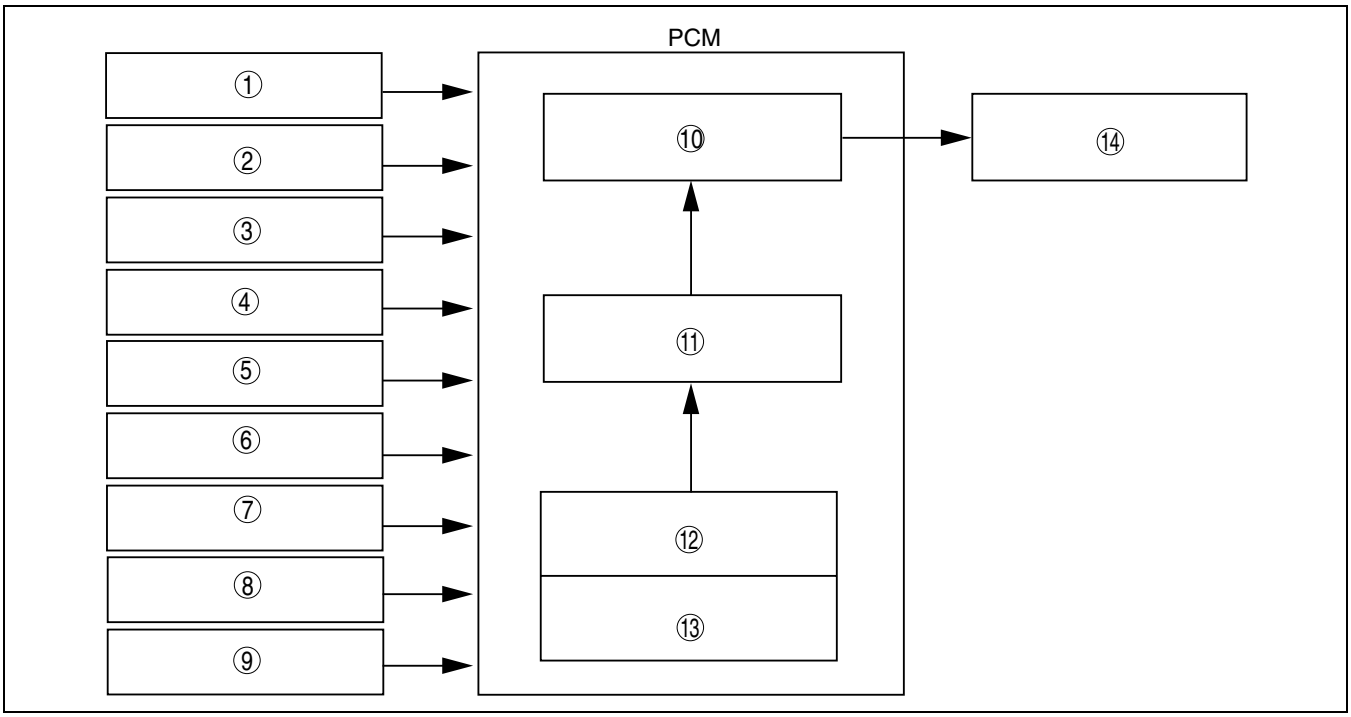

DPE0140ZT2009

1	MAF sensor
2	IAT sensor
3	MAP sensor
4	CKP sensor
5	Front HO2S
6	Battery voltage
7	Neutral switch (MTX)
8	CPP switch (MTX)
9	TR switch (ATX)
10	Purge solenoid valve energization time
11	Purge flow amount
12	Basic purge flow amount
13	Corrections
14	Purge solenoid valve

PURGE CONTROL OPERATION [L8, LF]

DPE014000000T33

Determination of purge solenoid valve energization time

- The PCM determines the target purge flow amount according to engine operation conditions as the basic flow amount. The actual operation delays the build-up of operation current from coil inductance and corrects energization time according to fluctuation in battery voltage to cause operation delay based on the mass of the needle valve and plunger, and spring resistance. The lower the rate of battery positive voltage, the longer the energization time.

Calculation method for purge flow amount

- The PCM determines the purge flow amount through the addition of each correction to the basic purge flow amount.

Contents		Calculation or determination method of purge flow amount and correction
Basic purge flow amount		The basic purge flow amount is determined by multiplying the intake air temperature correction to the purge mass volume which is calculated by multiplying the base purge rate and the intake air mass volume, which differs according to engine conditions.
Correction	Purge startup correction	Purpose: Prevents a sudden change in air/fuel ratio during the startup of purge control. **During purge control startup** • When purge control operation conditions are met→correction
	Volume decrease correction	Purpose: Decreases the amount of purge flow and stabilize the air/fuel ratio. **When the fuel injection control feedback correction value is unstable** • According to the front HO2S feedback condition

Operation conditions

- For purge control during normal driving, the PCM sends a duty signal to the purge solenoid valve when all of the following conditions are met.
  - — Fuel injection control is in the feedback zone or the high load volume increase zone.
  - — Airflow passage damage related DTC is not stored.
  - — Engine coolant temperature is **78 °C {172 °F} or more**.

HO2S HEATER CONTROL OUTLINE [L8, LF]

DPE014000000T34

- Based on the control of the front and rear HO2S heaters, a stabilized oxygen concentration is detected even at low exhaust gas temperature and feedback control of fuel injection even during cold engine start is made possible for improved cold temperature exhaust emission performance.
- When exhaust gas temperature is high, the front and rear HO2S are protected from a rise in temperature by the stopping of energization to the front and rear HO2S heaters.
- Through duty control of the front HO2S according to engine operation conditions (emission temperature), both exhaust emission performance improvement and protection of the front HO2S have been achieved.

HO2S HEATER CONTROL BLOCK DIAGRAM [L8, LF]

DPE014000000T35

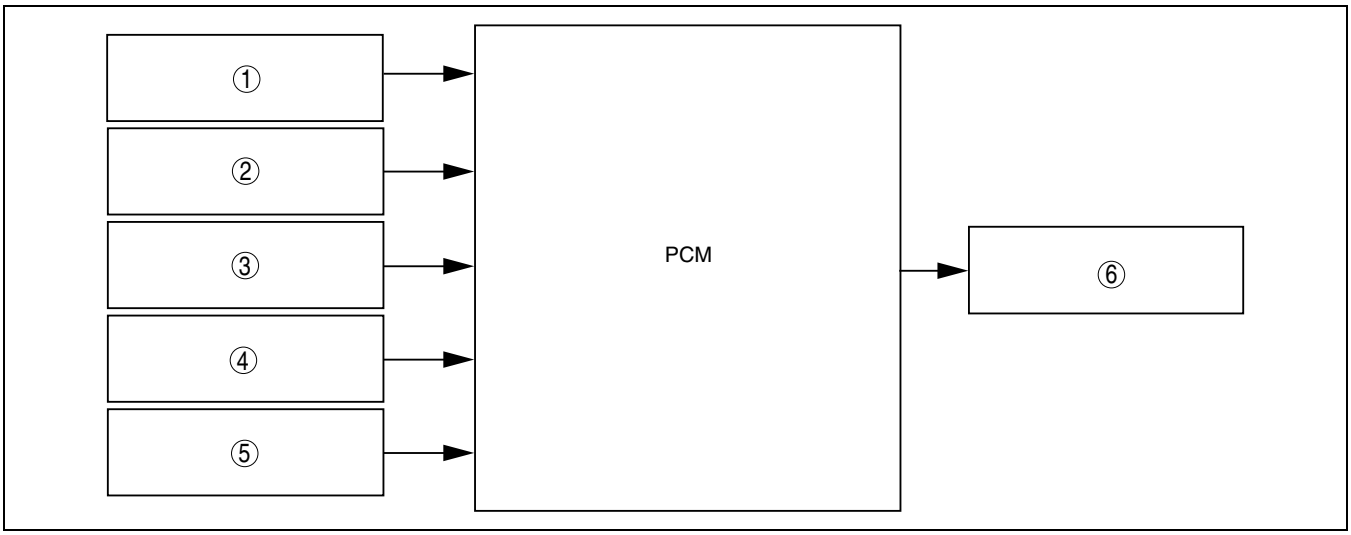

B3E0140T019

1	IAT sensor (front HO2S heater control)
2	MAF sensor
3	TP sensor (front HO2S heater control)

4	CKP sensor
5	ECT sensor
6	HO2S heater (front, rear)

HO2S HEATER CONTROL OPERATION [L8, LF]

DPE014000000T36

Front

Operation condition

- The PCM operates the front HO2S heater according to engine operation conditions as shown in the table below.

Drive duty ratio	Engine operation conditions
20 %	• Engine coolant temperature **5 °C {41 °F} or less**
35 %	• At engine start • During engine rotation except idling • When a DTC indicating a damaged engine coolant temperature sensor, throttle position sensor or intake air temperature sensor is detected.
100 %	• For a fixed period of time after engine start when the engine coolant temperature at engine start is **50 °C {122 °F} or less** than the engine coolant temperature when the engine is stopped from a previous operation (differs from engine coolant temperature at engine start [lower engine coolant temperature→longer time])

Inhibition conditions
- When all of the following conditions are met (for **6 s**):
  — During torque reduction execution
  — Engine speed is **5,000 rpm or more**.
  — Throttle opening angle **85 % or more**
- Engine speed **4,000 rpm or more**
- During high load
- When HO2S is damaged
- When ignition switch is turned to the ON position while engine is stopped

Rear
Operation conditions
- When all of the following conditions are met:
  — After fixed period of time from engine start
  — Engine speed is less than **4,000 rpm**.
  — Except during torque reduction execution
  — During low load

A/C CUT-OFF CONTROL OUTLINE [L8, LF]

DPE014000000T37

- Through energization and non-energization to the A/C relay (magnetic clutch) according to engine operation conditions, acceleration performance and engine reliability have been improved.

A/C CUT-OFF CONTROL BLOCK DIAGRAM [L8, LF]

DPE014000000T38

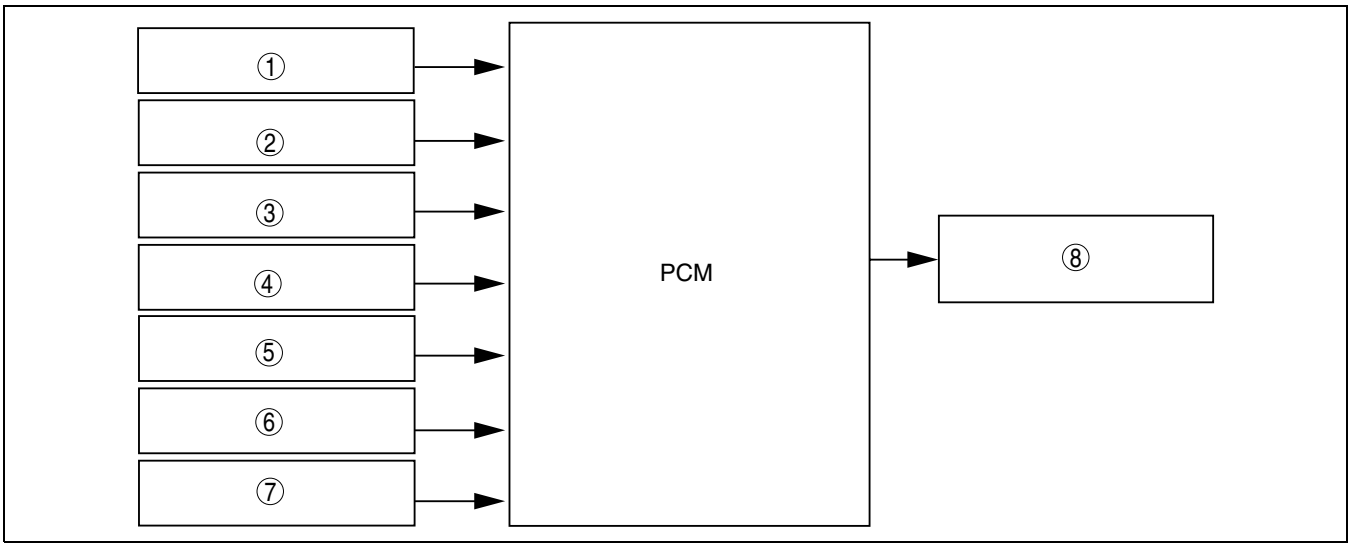

DPE0140ZT2010

1	TP sensor
2	ECT sensor
3	CKP sensor
4	Neutral switch (MTX)

5	CPP switch (MTX)
6	TR switch (ATX)
7	A/C on request signal
8	A/C relay

A/C CUT-OFF CONTROL OPERATION [L8, LF]

DPE014000000T39

- The PCM stops energization to the A/C relay when any of the following conditions are met:

A/C cut-off control operation conditions

Operation condition	A/C relay non-energization period	Purpose
At engine start	**Approx. 4 s**	Improved startability
At drive-away	**Approx. 3 s**	Improved drive-away performance
During acceleration (throttle valve opening angle **50% or more**)	**Approx. 5 s**	Improved acceleration performance
When the engine coolant temperature is **113 °C {235 °F}**	Repeatedly turns on and off **every 10 s** until the engine coolant temperature is less than **approx. 110 °C {230 °F}**	Improved engine reliability
When the engine coolant temperature is **118 °C {244 °F} or more**	Until the engine coolant temperature decreases to less than **approx. 113 °C {235 °F}**	Improved engine reliability
At high engine speed (engine speed **5,330 rpm or more*1, 6,250 rpm or more*2**)	**Approx. 5 s**	Improved engine speed stability

*1 : Except for Europe specs.
*2 : Europe specs.

ELECTRICAL FAN CONTROL OUTLINE [L8, LF]

DPE014000000T40

- Through cooling of the radiator and condenser by operation of the cooling fan according to vehicle conditions, engine reliability and cooling performance have been improved.

ELECTRICAL FAN CONTROL BLOCK DIAGRAM [L8, LF]

DPE014000000T41

- The PCM determines the engine operation conditions based on input signals from the sensors, calculating the optimum fan motor rotation speed as the fan motor drive duty ratio, and sends a signal to the fan control module to control the cooling fan rotation speed.

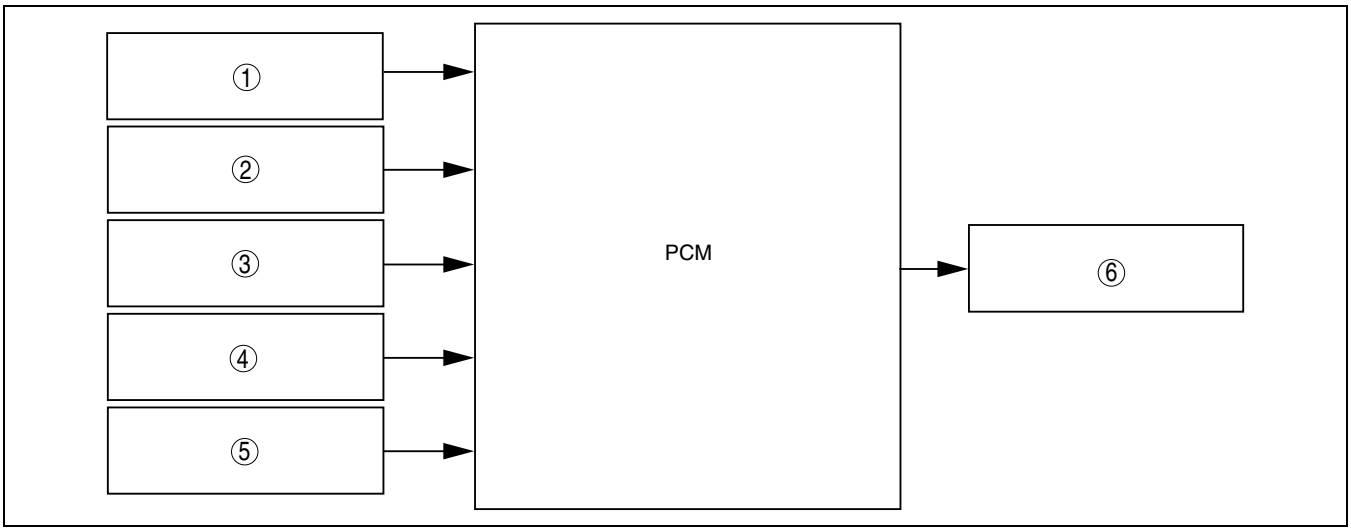

B3E0140T019

1	ECT sensor
2	TP sensor
3	Vehicle speed signal (CAN)

4	A/C on request signal
5	Battery voltage
6	Fan control module

ELECTRICAL FAN CONTROL OPERATION [L8, LF]

DPE014000000T42

- The PCM compares the duty ratios determined at the engine coolant temperature and refrigerant pressure controls and sends the higher duty ratio as the control signal to the fan control module.

Engine coolant temperature control

PCM output duty ratio	Engine operation conditions
100 %	• Engine coolant temperature is 108°C {226°F} or more.
75 %	• Engine coolant temperature is 106—108°C {223—226 °F}.
0 %	• Engine coolant temperature is less than 100 °C {212 °F}.

Refrigerant pressure control

PCM output duty ratio	Engine operation conditions
75 %	• When all of the following conditions are met: — A/C is on. — Refrigerant pressure switch (medium pressure) is on.
65 %	• When all of the following conditions are met: — A/C is on. — Refrigerant pressure switch (medium pressure) is off. — Vehicle speed is 45 km/h {27 mph} or less.
60 %	• When all of the following conditions are met: — A/C is on. — Refrigerant pressure switch (medium pressure) is off. — Vehicle speed is 45—85 km/h {28—52 mph}.
0 %	• When all of the following conditions are met: — A/C is on. — Refrigerant pressure switch (medium pressure) is off. — Vehicle speed is 85 km/h {53 mph} or more.
	• A/C is off.

STARTER CUT-OFF CONTROL OUTLINE [L8, LF]

DPE014000000T43

- Theft deterrence has been improved by controlling energization to the starter relay according to an engine stop request signal from the immobilizer system.

STARTER CUT-OFF CONTROL BLOCK DIAGRAM [L8, LF]

DPE014000000T44

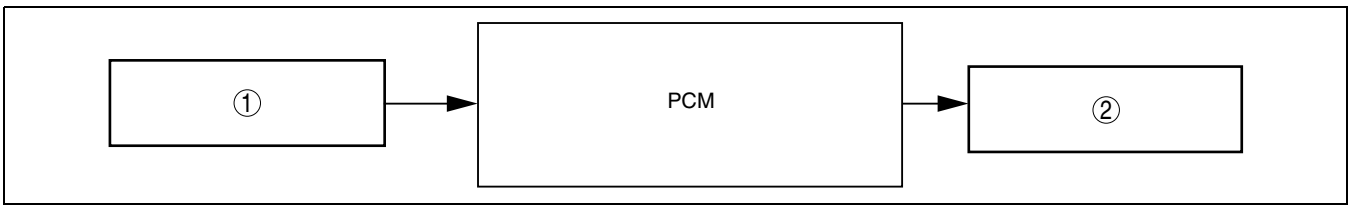

B3E0140T013

1	Instrument cluster (engine stop request signal)		2	Starter relay

STARTER CUT-OFF CONTROL OPERATION [L8, LF]

DPE014000000T45

- The PCM stops energization of the starter relay according to an engine stop request from the immobilizer system.
  When receiving engine stop request signal
  — The PCM does not establish a ground to the starter circuit. Therefore, the starter motor does not rotate because there is no energization of the starter relay even if the ignition switch is turned to the START position, and the engine does not start.
  When not receiving engine stop request signal
  — The PCM establishes a ground to the starter circuit. Therefore, when the ignition switch is turned to the START position, the starter relay is energized and the starter motor rotates. As a result, the engine starts

normally.

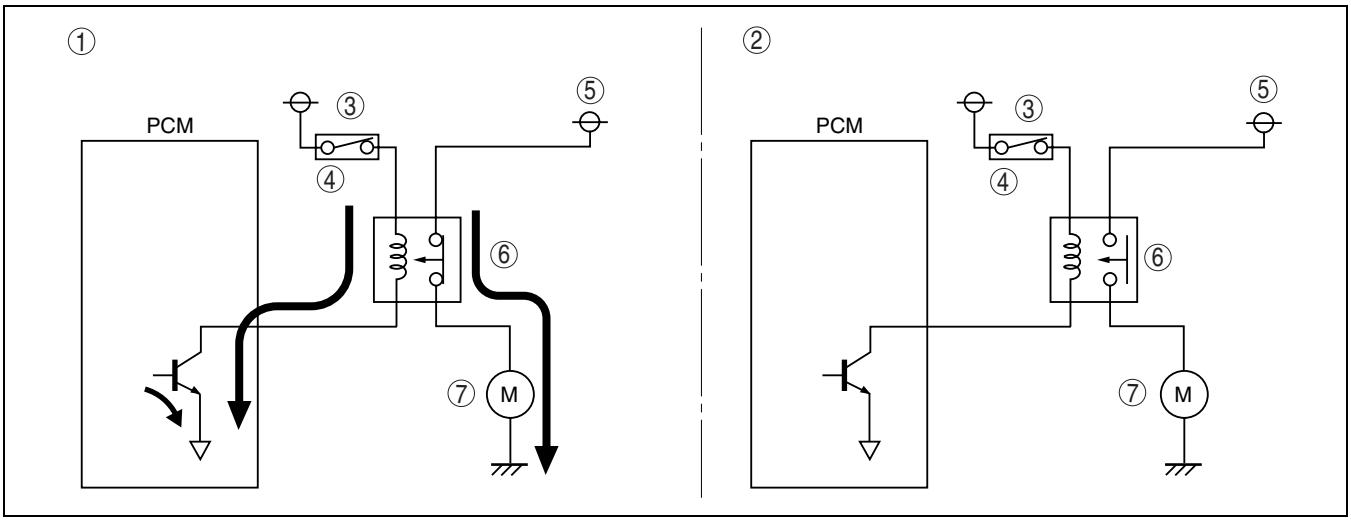

B3E0140T559

1	When not receiving engine stop request signal
2	When engine stop request signal is received
3	Ignition switch
4	Start signal

5	From battery
6	Starter relay
7	Starter

GENERATOR CONTROL OUTLINE [L8, LF]

DPE014000000T46

- Idling stability and the corresponding load performance have been improved by optimum control of generator voltage according to engine operation and electrical load conditions.
- The PCM determines the engine operation and electrical load conditions based on the input signals from input devices shown in the figure below and controls the excitation time of the generator field coils.

GENERATOR CONTROL BLOCK DIAGRAM [L8, LF]

DPE014000000T47

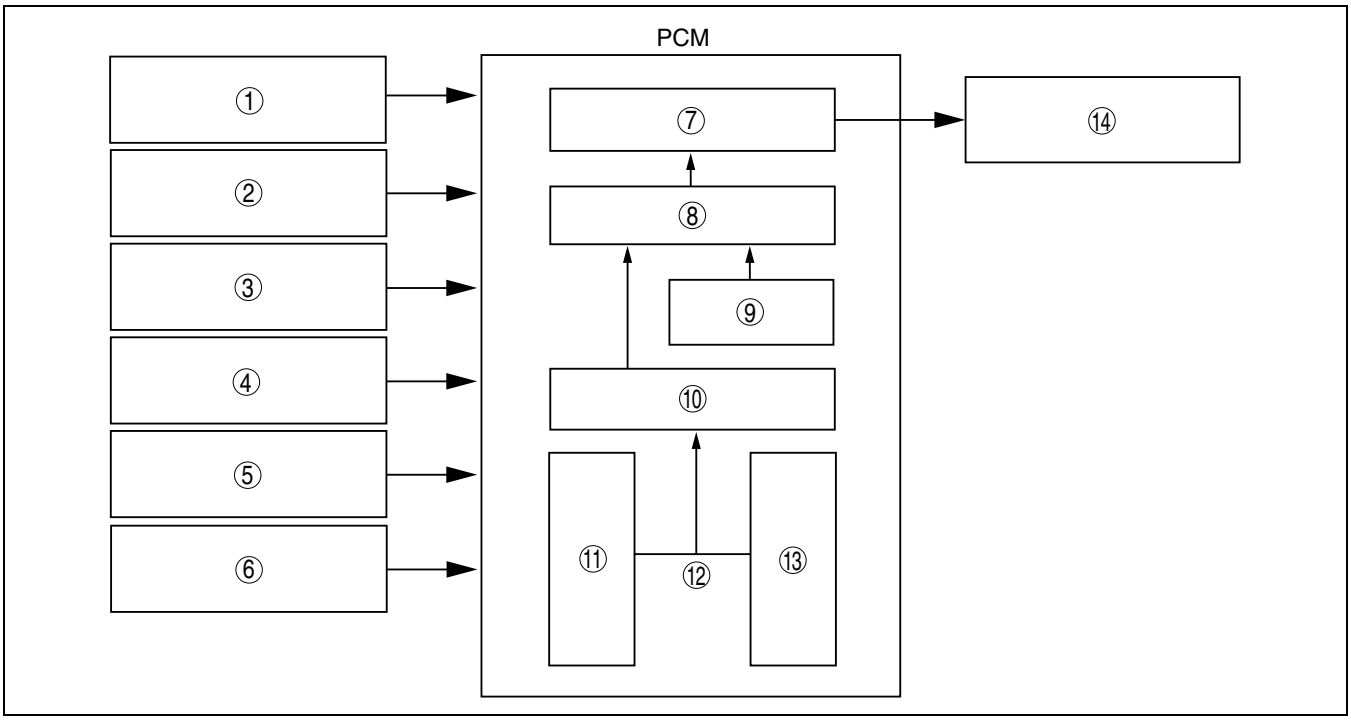

B3E0140T023

1	IAT sensor
2	ECT sensor
3	CKP sensor

4	Vehicle speed signal (CAN)
5	Generator (terminal P: stator coil)
6	Battery voltage

7	Field coil excitation time
8	Target excitation current
9	Generator rotation speed
10	Target generated current
11	Target battery voltage (regulating voltage)
12	Deviation
13	Current battery voltage
14	Generator (terminal D: Field coil)

GENERATOR CONTROL OPERATION [L8, LF]

DPE014000000T48

Determination of field coil excitation time

1	1 cycle
2	Excitation time

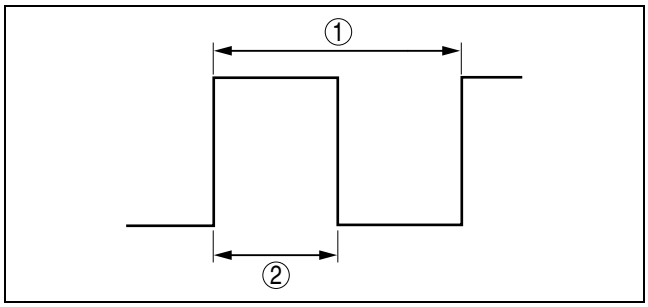

B3E0140T024

- By sending a duty signal to the power transistor built into the generator, the PCM increases and decreases the field coil excitation current.
- The field coil excitation current changes according to changes in the power transistor excitation time by changing the duty signal duty ratio. For example, when the battery voltage is low, the duty signal duty ratio sent to power transistor is higher, and the excitation current to the field coils increases.

Control

- To maintain optimum battery voltage, the PCM calculates the target excitation current based on the targeted generator current (target generated current) and the generator rotation speed at the time.
- The generator rotation speed is calculated from the generator pulley and crankshaft pulley ratios, and the engine speed.
- The PCM compares the target battery voltage (regulating voltage) calculated from the intake airflow temperature, engine speed and vehicle speed with the current battery voltage and, based on this difference, calculates the required generator current.
- When an electrical load is applied, the target rotation speed increases during idling because the battery voltage decreases due to the increased power consumption.

CONTROLLER AREA NETWORK (CAN) OUTLINE [L8, LF]

DPE014000000T49

- The PCM sends and receives data to and from other modules via the CAN system. Refer to Section 09 for a detailed explanation of the CAN. (See 09–40–11 CAN SYSTEM DESCRIPTION.)

Data sent

- Engine speed
- Vehicle speed
- ATX gear position/selector lever position (ATX)
- Neutral switch position (MTX)
- CPP switch position (MTX)
- Engine torque
- Throttle valve opening angle
- Brake pedal position
- Transmission/axle specifications
- TCC status (ATX)
- Engine specification
- Immobilizer-related information
- AT warning light on request (ATX)
- Engine coolant temperature
- Travelled distance
- Fuel injection amount
- MIL on request

- Generator warning light on request

Data received
- Immobilizer-related information
- Brake system status (EBD/ABS/DSC)
- Wheel speed (LF, RF, LR, RR)
- Fuel tank level
- A/C on request
- Transaxle in reverse position

PCM FUNCTION [L8, LF]

DPE014018880T01

Function List

- The control descriptions are as shown below.

Function	Description
IAC	The PCM controls the IAC valve by driving it with the duty cycle so that an optimum opening angle is obtained according to engine operation conditions, ensuring idling stability.
Fully-closed throttle position learning control	The fully-closed throttle voltage of the throttle position sensor, obtained through learning, is used for the throttle valve opening angle correction.
Variable intake air control (LF)	Switches energization of the variable shutter valve actuator according to engine speed to enhance the inertia charging effect.
Variable tumble control	At cold engine start, the following effects occur due to the closing of the variable tumble control for improved cold engine emission performance. • Improved intake airflow speed near injectors • Strong air tumble occurs in the combustion changer, promoting vaporization mixture of intake air and fuel
Fuel injection control	Performs optimum fuel injection according to engine operation conditions.
Fuel pump control	Performs energization of the fuel pump relay only when the engine is running (operates fuel pump) to improve stability and durability.
ESA control	Controls ignition to optimum timing according to engine operation conditions.
Evaporative purge control	An appropriate amount of evaporative gas is fed into the dynamic chamber by the driving of the purge solenoid valve according to the engine operation conditions to ensure driveability and prevent release of fuel vapor gas into the atmosphere.
EGR control	Adjusts the EGR to the optimum opening angle according to engine operation conditions.
HO2S heater control	Based on the control of the front and rear HO2S heater, a stabilized oxygen concentration is detected even at low exhaust gas temperature and feedback control of fuel injection even during cold engine start is made possible for improved cold temperature emission performance.
A/C cut-off control	The current application (energize/non-energize) to the A/C relay (magnetic clutch) is controlled according to the engine operation conditions to prevent deterioration of engine performance, damage to the engine, and deterioration of the A/C function.
Electrical fan control	Through cooling of the radiator and condenser by operation of the cooling fan according to vehicle conditions, engine reliability and cooling performance have been improved.
Starter cut-off control	Theft deterrence has been improved by controlling energization to the starter relay according to an engine stop request signal from the immobilizer system.
Generator control	Generator output is optimized according to the engine operation and electrical load conditions, ensuring idling stability and anti-load performance.
CAN	Used for communication with the EHPAS control module, DSC HU/CM, ABS HU/CM, instrument cluster and DLC-2.

PCM CONSTRUCTION/OPERATION [L8, LF]

DPE014018880T02

Structure

- A 120-pin (two-block) PCM connector has been adopted.

NEUTRAL SWITCH FUNCTION [L8, LF (MTX)]

DPE014017640T01

- The neutral switch detects the neutral position of the gearshift lever.

NEUTRAL SWITCH CONSTRUCTION/OPERATION [L8, LF (MTX)]

DPE014017640T02

- When the shift lever is in the neutral position, the contact closes (ON) and the PCM detects a voltage of **0 V**. When the shift lever is not in the neutral position, the contact opens (OFF) and the PCM detects a voltage of **12 V**.

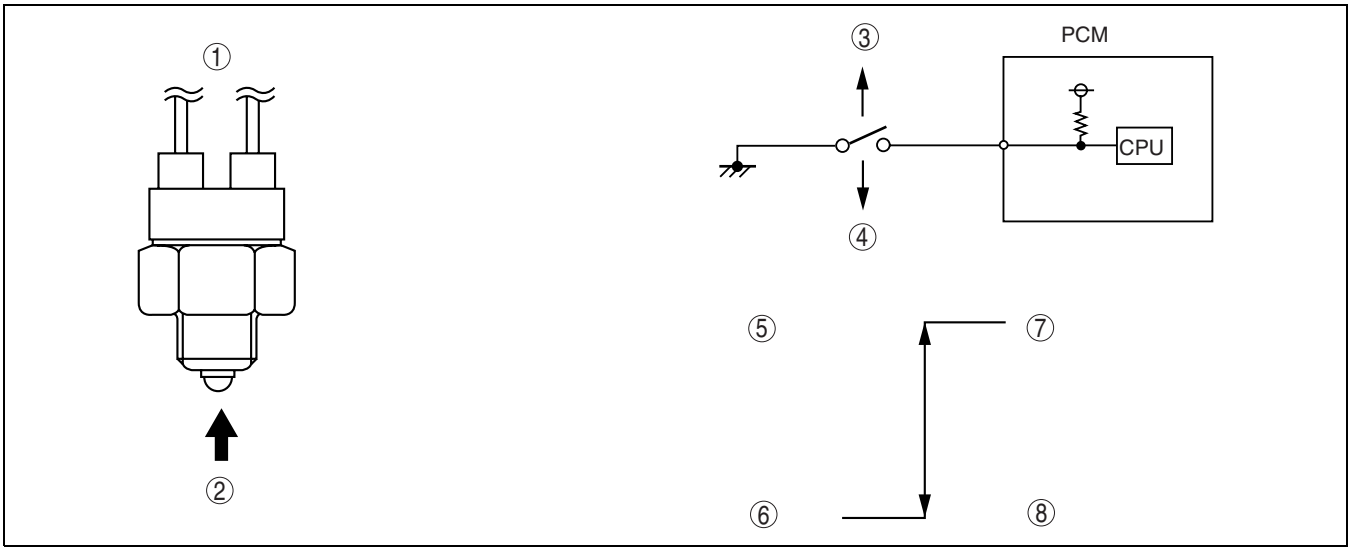

DPE140AT2602

1	Neutral switch
2	Push ON
3	Other then neutral (OFF)
4	Neutral (ON)

5	Neutral (ON)
6	Except above
7	No load
8	Load

CLUTCH PEDAL POSITION (CPP) SWITCH FUNCTION [L8, LF (MTX)]

DPE014018660T01

- This switch determines whether the engine is under a load condition (condition in which the engine output is transmitted to the powertrain) or under a no-load condition (condition in which the engine output is not transmitted to the powertrain).
- Detects the clutch engagement condition.

CLUTCH PEDAL POSITION (CPP) SWITCH CONSTRUCTION/OPERATION [L8, LF (MTX)]

DPE014018660T02

- When the clutch pedal is depressed, the contact closes (ON) and the PCM detects a voltage of **0 V**. When the clutch pedal is not depressed, the contact opens (OFF) the PCM detects a voltage of **12 V**.

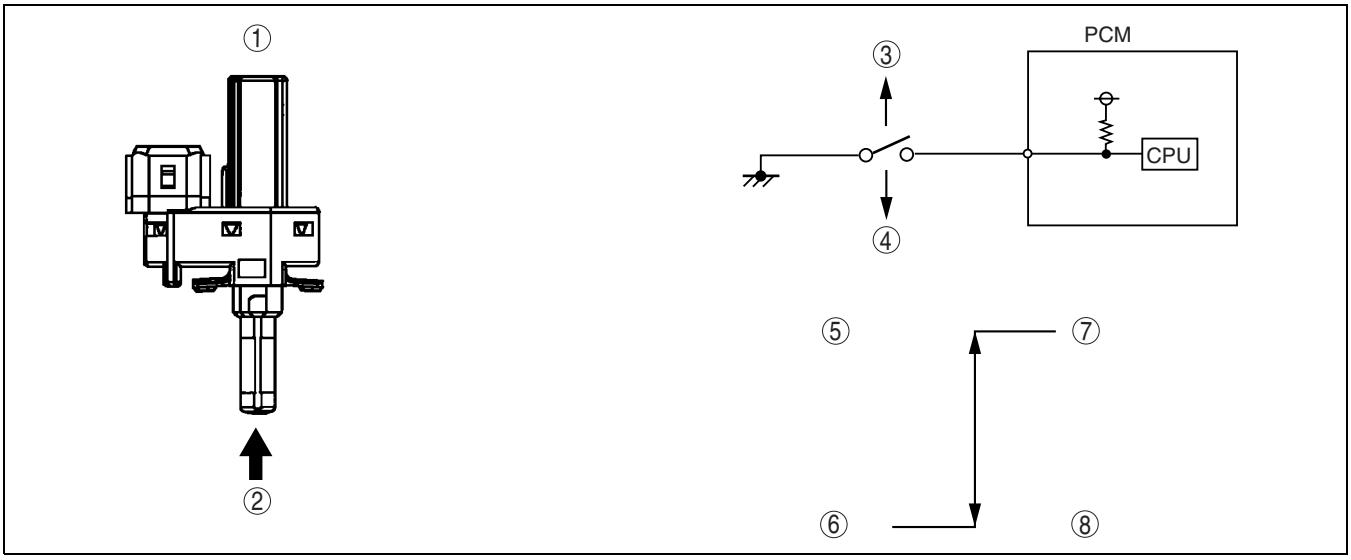

DPE140AT2603

1	CPP switch
2	Push OFF
3	Clutch pedal not depressed (OFF)
4	Clutch pedal depressed (ON)

5	Clutch pedal depressed (ON)
6	Clutch pedal not depressed (OFF)
7	No load
8	Load

ENGINE COOLANT TEMPERATURE (ECT) SENSOR FUNCTION [L8, LF]

DPE014018841T01

- Detects the engine coolant temperature.

ENGINE COOLANT TEMPERATURE (ECT) SENSOR CONSTRUCTION/OPERATION [L8, LF]

DPE014018841T02

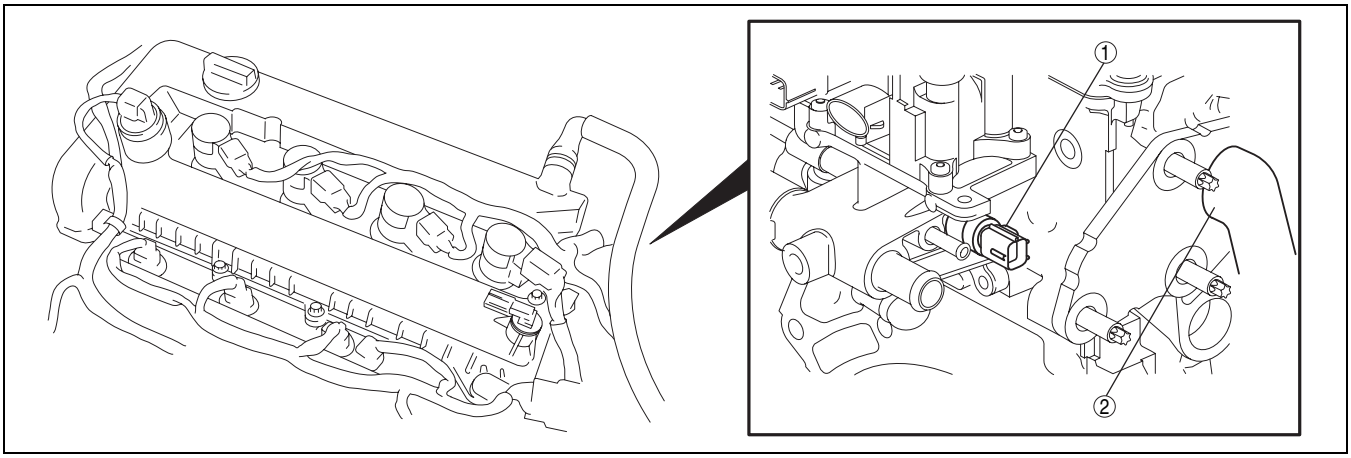

B3E0140T031

1	ECT sensor

2	Exhaust manifold

- Installed on the water bypass tube (directly below the ignition coil).
- The ECT is a thermistor type, the resistance changes according to the engine coolant temperature.

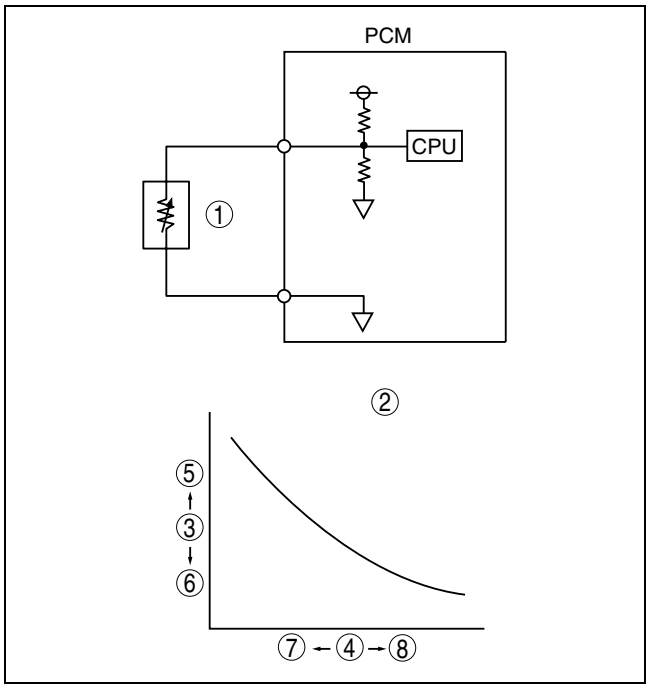

DPE140AT2604

1	ECT sensor
2	ECT sensor resistance characteristic
3	Resistance
4	Engine coolant temperature
5	Large
6	Small
7	Low
8	High

- The resistance decreases if the engine coolant temperature increases, and increases if the engine coolant temperature decreases.

INTAKE AIR TEMPERATURE (IAT) SENSOR FUNCTION [L8, LF]

DPE014018842T01

- Detects air temperature inducted in the engine.

INTAKE AIR TEMPERATURE (IAT) SENSOR CONSTRUCTION/OPERATION [L8, LF]

DPE014018842T02

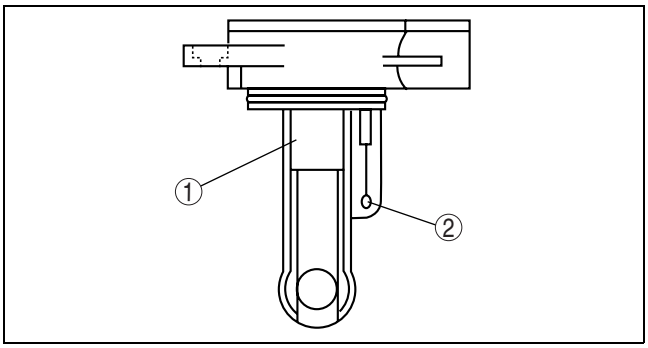

B3E0140T510

1	MAF sensor
2	IAT sensor

- Built into the MAF sensor.
- The IAT sensor is a thermistor type, the resistance changes according to the intake air temperature.

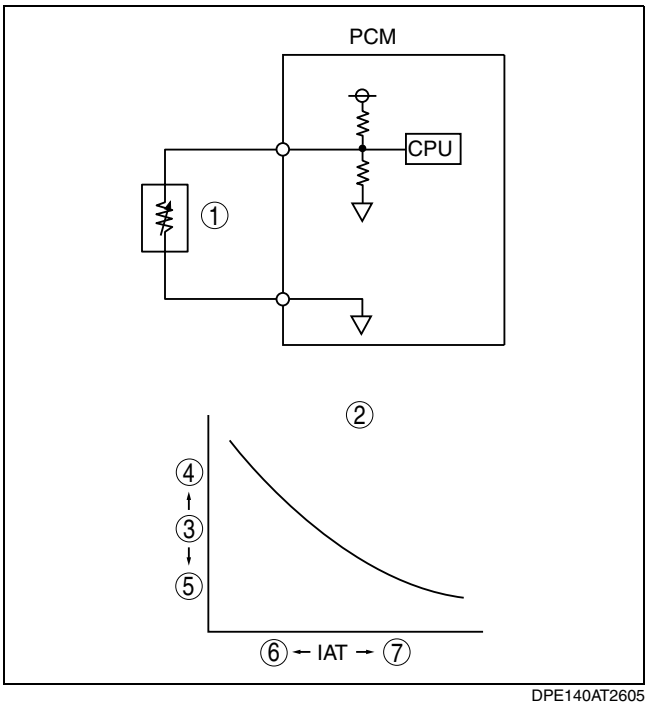

DPE140AT2605

1	IAT sensor
2	IAT sensor characteristic
3	Resistance
4	Large
5	Small
6	Low
7	High

- The resistance decreases if the intake air temperature increases and conversely increases if the intake air temperature decreases.

CRANKSHAFT POSITION (CKP) SENSOR FUNCTION [L8, LF]

DPE014018220T01

- Detects the pulse wheel rotation pulse as the engine crank angle signal.

CRANKSHAFT POSITION (CKP) SENSOR CONSTRUCTION/OPERATION [L8, LF]

DPE014018220T02

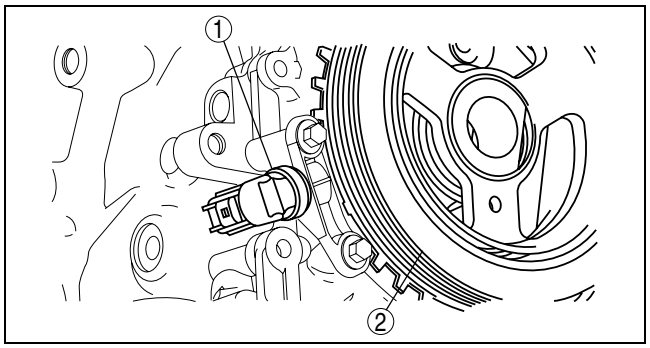

B3E0140T035

1	CKP sensor
2	Crankshaft pulley

- Installed on the side surface of the cylinder block (driver's side). Assembled at the ninth pulse position (**90** °) from the area where there is no single projection on the crankshaft position sensor pulse wheel.
- The crankshaft position sensor pulse wheel has 35 projections and spaces with **10** ° of crank angle between each projection.
- The fluctuation in magnetic flux density detected by the magnetic pickup coil in the crankshaft position sensor is input to the PCM as voltage.
- If the crankshaft position sensor is removed/installed or replaced, magnetized objects such as metal shavings adhering to the sensor could cause fluctuation in the magnetic flux of the magnetic pickup coil, causing abnormal sensor output which could adversely affect engine control.

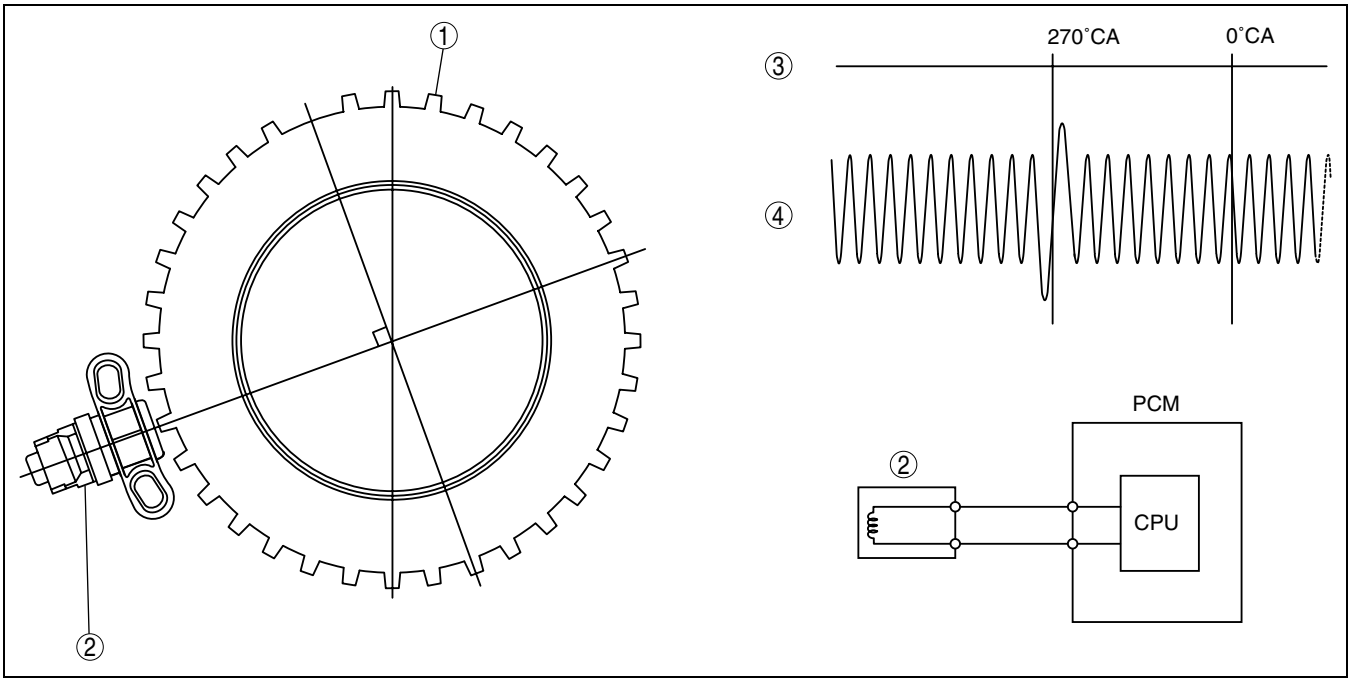

DPE140AT2606

1	Pulse wheel
2	Crankshaft position sensor

3	Crank angle
4	Crankshaft position sensor output pulse

CAMSHAFT POSITION (CMP) SENSOR FUNCTION [L8, LF]

DPE014018230T01

- Detects the position **60**° after TDC of compression in the No.1 cylinder (Cam angle **30**°).

CAMSHAFT POSITION (CMP) SENSOR CONSTRUCTION/OPERATION [L8, LF]

DPE014018230T02

- Installed on the engine head cover.
- Detects one pulse per one camshaft rotation from the projection on the intake manifold side of the camshaft.
- The projection detects the position **60**° after TDC of compression in the No.1 cylinder.
- The change in the amount of magnetic flux density detected by the magnetic pickup coil in the camshaft

position sensor is input to the PCM as voltage.

- If the camshaft position sensor is removed/installed or replaced, magnetized objects such as metal shavings adhering to the sensor could cause distortion in the magnetic flux of the magnetic pickup coil, causing abnormal sensor output which could adversely affect the engine control.

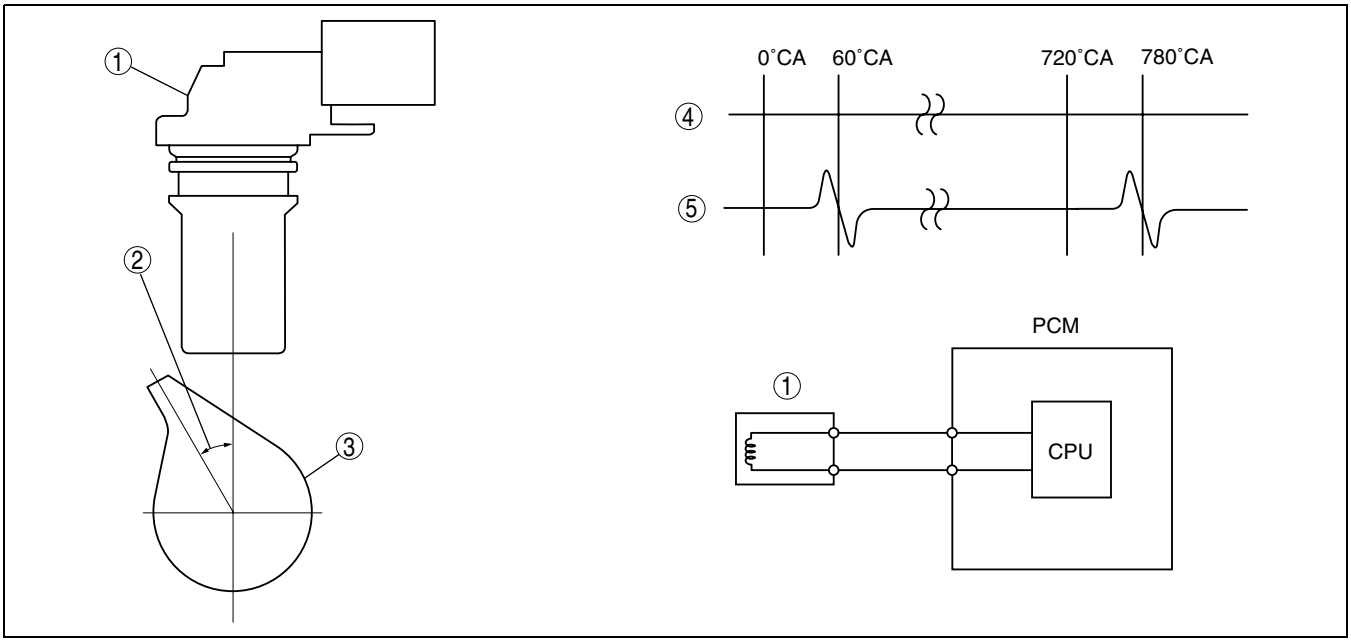

DPE140AT2607

1	CMP sensor
2	Cam angle **30**°
3	Intake air valve-side camshaft

4	Crank angle
5	CMP sensor output pulse

THROTTLE POSITION (TP) SENSOR FUNCTION [L8, LF]

DPE014018910T01

- Detects the throttle valve opening angle

THROTTLE POSITION (TP) SENSOR CONSTRUCTION/OPERATION [L8, LF]

DPE014018910T02

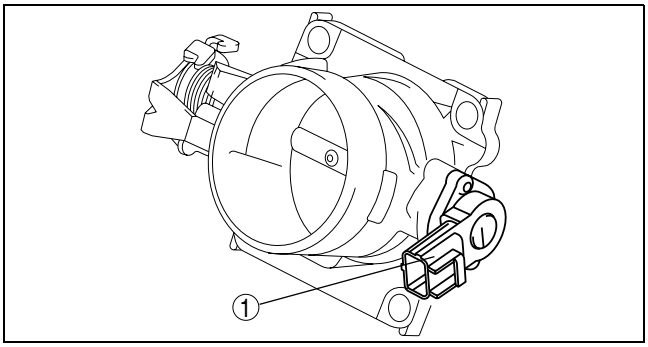

B3E0140T039

1	TP sensor

- A potentiometer type has been adopted.

- Installed to the valve shaft so that it is linked to the opening and closing of the throttle valve.

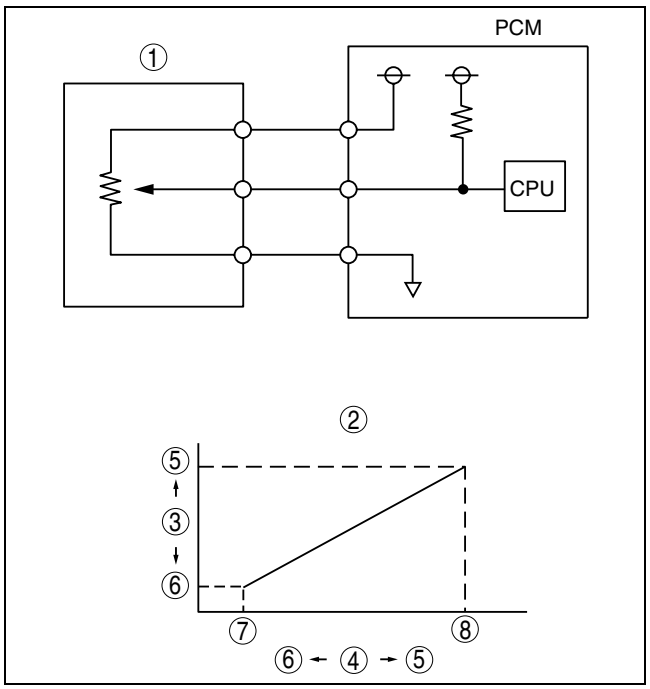

DPE140AT2608

1	TP sensor
2	TP sensor voltage characteristic
3	Output voltage
4	Throttle opening angle
5	Large
6	Small
7	Fully closed
8	Fully open

- Detects the fluctuation in voltage (variable resistance) of the throttle valve opening angle and outputs it to the PCM. The voltage output to the PCM increases proportionately to the increase in throttle valve opening angle.

MASS AIR FLOW (MAF) SENSOR FUNCTION [L8, LF]

DPE014013215T01

- Detects the air amount (mass airflow amount) inducted into the engine.

MASS AIR FLOW (MAF) SENSOR CONSTRUCTION/OPERATION [L8, LF]

DPE014013215T02

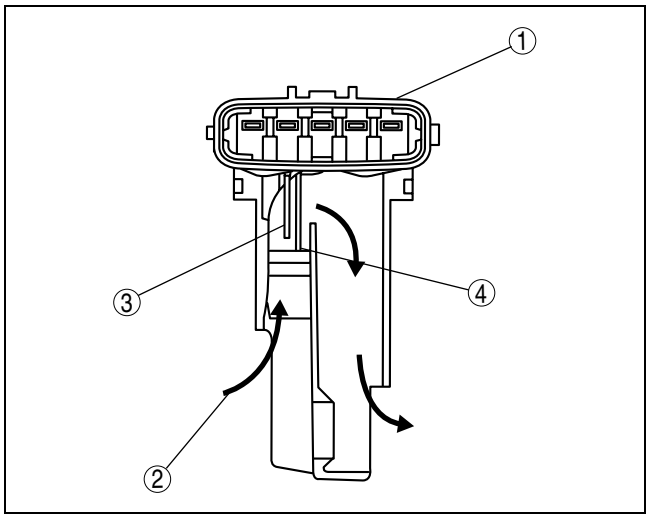

DPE140AT27891

1	MAF sensor
2	Intake air
3	Cold wire

4	Hot wire

- Built into the intake air temperature sensor.
- Converts the mass intake airflow amount to voltage.
- When the temperature of the metal decreases, the resistance decreases. Using this characteristic, the hot wire captures heat from the flow of intake air and converts the intake airflow amount to voltage.
- The cold wire converts intake air density to voltage from the ambient temperature of the cold wire, using the characteristic of air whereby the intake air density decreases due to the increase in intake air temperature.
- The voltages obtained by the hot wire (intake airflow amount) and the cold wire are compared and the electric potential becomes stable by supplying the difference in voltage to the transistor. The voltage supplied to the hot wire is output as the mass intake airflow amount.

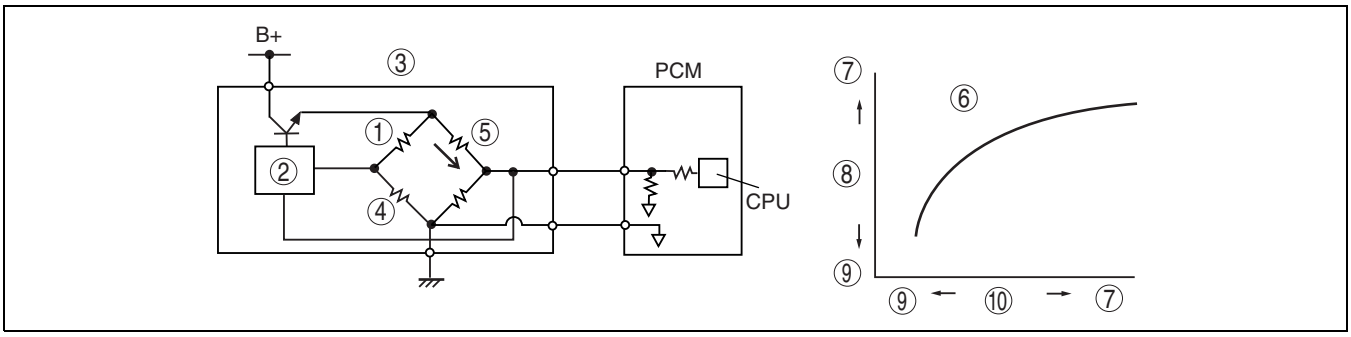

DPE140AT2609

1	Air thermometer
2	Control circuit
3	MAF sensor
4	Current
5	Hot wire

6	MAF sensor output voltage characteristic
7	High
8	Voltage
9	Low
10	Intake air amount

HEATED OXYGEN SENSOR (HO2S) FUNCTION [L8, LF]

DPE014018860T01

- Detects the oxygen concentration in the exhaust gas.
- A heater has been adopted, allowing stable detection of the oxygen concentration even when the exhaust gas temperature is low.

HEATED OXYGEN SENSOR (HO2S) CONSTRUCTION/OPERATION [L8, LF]

DPE014018860T02

- Installed on the front and back of the WU-TWC.

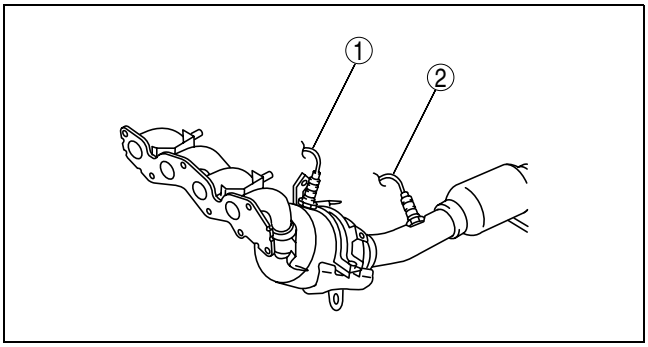

B3E0140T026

1	Front HO2S
2	Rear HO2S

- A heater is built into the sensor to facilitate the activation of the HO2S at engine startup (when the exhaust gas temperature is low).
- A zirconium element is used on the sensor. When there is a difference between the oxygen concentration inside and outside the element, electromotive force is generated by the movement of oxygen ions (inside of the zirconium element: atmosphere, outside: exhaust gas). The electromotive force changes significantly at the boundary of the stoichiometric air/fuel ratio (A/F=14.7). The PCM receives the voltage generated from the HO2S directly, and increases or decreases the fuel injection amount by the fuel injection control so that it is close to the stoichiometric air/fuel ratio.

- When the temperature of the zirconium element is low, electromotive force is not generated. Therefore the HO2S is heated by a built-in heater, facilitating the oxygen sensor activation. Due to this, the sensor is efficiently activated even immediately after cold-engine startup, and a stable sensor output can be obtained.

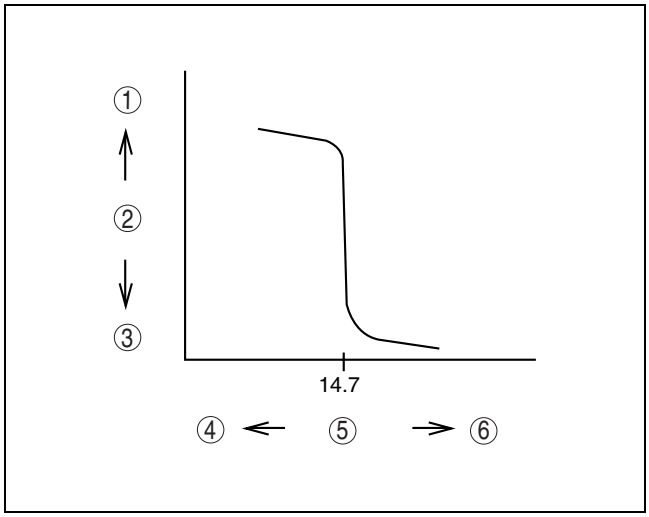

BHE0140T064

1	High
2	Output voltage
3	Low
4	Rich
5	Air/fuel ratio
6	Lean

MANIFOLD ABSOLUTE PRESSURE (MAP) SENSOR FUNCTION [L8, LF]

DPE014018210T01

- Detects intake air pressure in the intake manifold.

MANIFOLD ABSOLUTE PRESSURE (MAP) SENSOR CONSTRUCTION/OPERATION [L8, LF]

DPE014018210T02

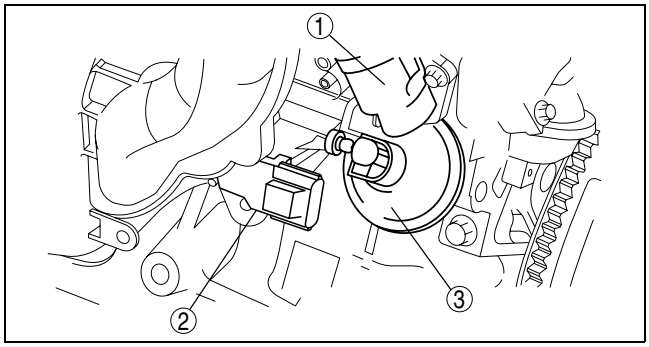

B3E0140T046

1	IAC solenoid valve
2	MAP sensor
3	Variable intake air shutter valve actuator

- When pressure is applied to the piezoelectric element in the sensor, an electric potential difference occurs. Output voltage increases as the intake air pressure increases.

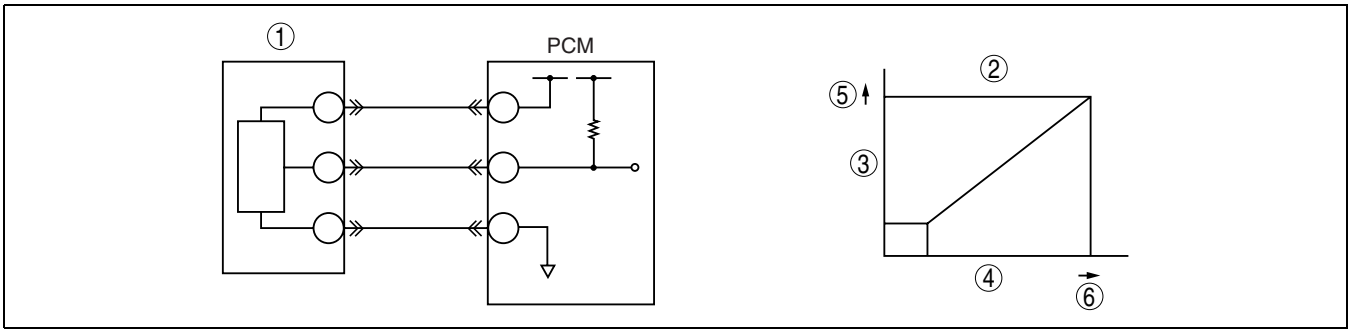

DPE140AT2610

1	MAP sensor
2	MAP sensor characteristic
3	Output voltage

4	Intake air pressure
5	Large
6	High

KNOCK SENSOR (KS) FUNCTION [L8, LF]

DPE014018920T01

- Detects abnormal combustion in the engine.

KNOCK SENSOR (KS) CONSTRUCTION/OPERATION [L8, LF]

DPE014018920T02

- Installed on the front of the cylinder block (intake manifold side).
- Converts vibration from abnormal combustion in the engine to voltage using the piezoelectric effect in the semi-conductor and outputs it to the PCM.
- The piezoelectric effect is a phenomenon in which a difference in electric potential is produced on the surface of a piezoelectric element by the application of tensile load or pressure from a certain direction. Tensile load and pressure applied to the KS originates from engine vibration caused by abnormal combustion in the engine. The difference in electric potential, which results from the distortion by the vibration, is sent to the PCM as a knocking signal.

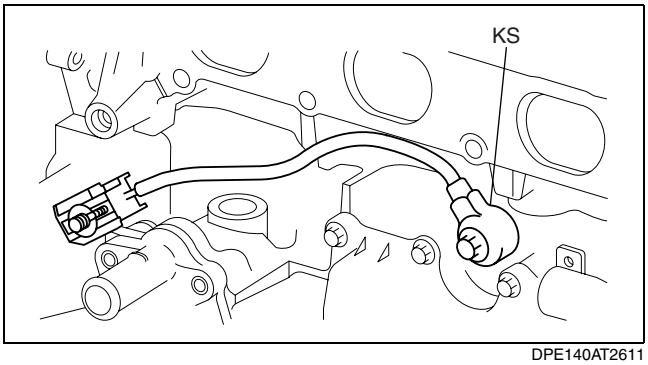

DPE140AT2611

BAROMETRIC PRESSURE (BARO) SENSOR FUNCTION [L8, LF (VEHICLES EQUIPPED WITH BARO SENSOR BUILT INTO PCM)]

DPE014018211T01

- Detects the BARO.

BAROMETRIC PRESSURE (BARO) SENSOR CONSTRUCTION/OPERATION [L8, LF (VEHICLES EQUIPPED WITH BARO SENSOR BUILT INTO PCM)]

DPE014018211T02

- The BARO sensor is integrated with PCM.
- The piezoelectric element is enclosed in the sensor and the electric potential difference changes as the BARO drops. The output voltage decreases as the BARO decreases.

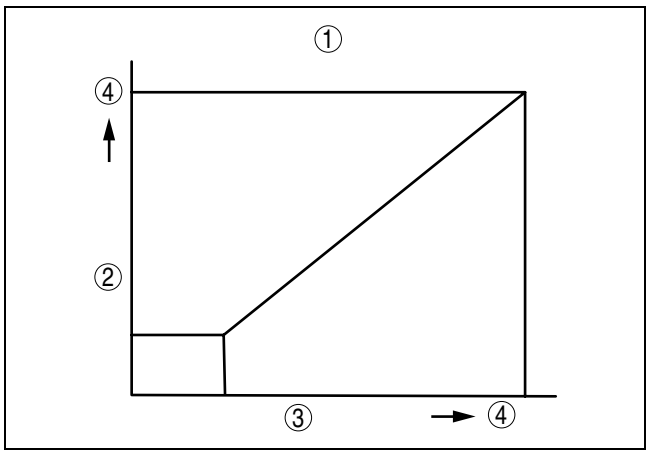

DPE0140ZT2012

1	BARO sensor voltage characteristic
2	Output voltage
3	Barometric pressure
4	High